BRIDGE DECK FORMING MANUAL

GAMCO™

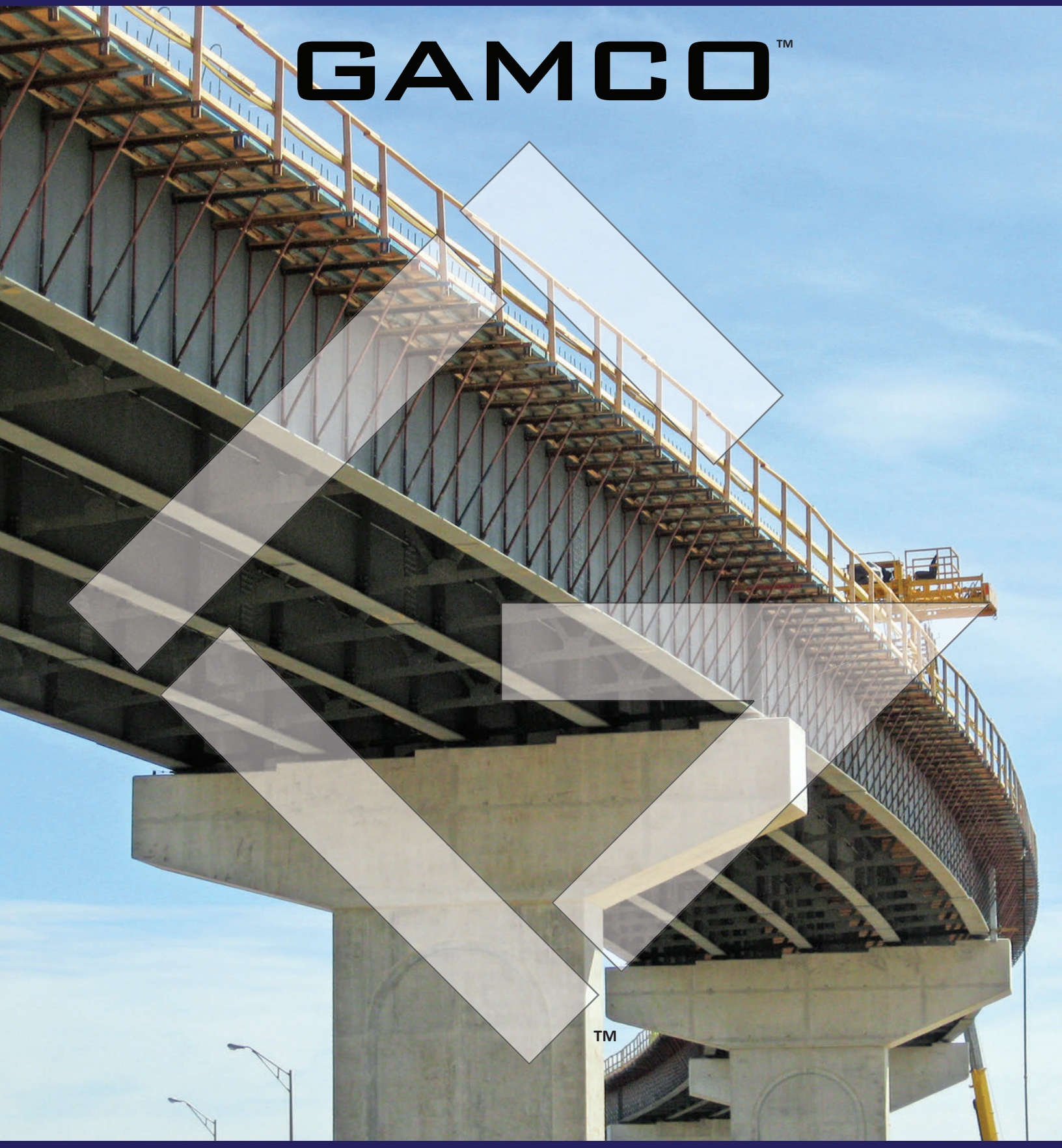

FORMING - SHORING - FABRICATION - ENGINEERING

WWW.GAMCOFORM.COM

George A. More
Gamco's Founder

After graduating from the University of Wisconsin with an emphasis in Math and Engineering, George began his career in the construction industry with the Symons Corporation in Des Plaines, Illinois. After two years he was one of the top salesmen. He quickly moved up the corporate ladder to become assistant manager of the Cincinnati branch in 1970 and manager in 1973. George was instrumental in the Cincinnati branch becoming one of the top producers in the country.

In 1977 George's creativity and innovations in the industry led him to start his own business with his wife Sally - Gamco Concrete Forms & Accessories. After completing college, his two sons Brian and Mike joined forces with him in the early 1990's and have been here ever since.

Gamco today continues in George's tradition of strong customer service, innovative ideas and engineering. We have expanded our manufacturing capabilities and national presence in the bridge, parking garage, shoring and infrastructure industries.

SAFETY

Gamco Bridge Deck forming products are designed and intended for use by experienced, qualified professionals only. Lack of supervision by a qualified person, or misuse can lead to accidents resulting in property damage or serious bodily injury or death. The contractor must evaluate the application of Gamco products to ensure that they are being used within their safe working load (SWL) given an appropriate factor of safety (FS) based upon jobsite conditions. Product ultimate capacities and SWL listed in this manual have been derived from averaged physical testing results. Under no circumstance should a product's SWL be exceeded. Gamco aims to ensure that every product it sells or manufactures meets and or exceeds all safety requirements. The performance of a product, however, can be greatly affected by the manner in which the product is used. For this reason, any variance from standard product applications must be approved by Gamco to ensure the safe performance of the product.

SAFE WORKING LOADS

Published safe working loads and safety factors are intended for normal jobsite conditions. In situations where conditions are other than normal, such as asymmetrical placement of concrete, uplift forces, impact from pumped concrete, use of heavy equipment or very tall formwork height, these published safe working loads need to be adjusted for a new factor of safety.

Minimum Safety Factors of Formwork Accessories

Accessory	Safety Factor	Type of Construction
Form Tie	2 to 1	All conditions.
Form Anchor	2 to 1	Formwork and concrete dead load only.
Form Anchor	3 to 1	Formwork and concrete dead load and live load.
Form Hangers	2 to 1	All conditions.
Anchor Inserts	2 to 1	When used with form ties (not lifting).

The following formula should be used in situations requiring a larger factor of safety than that which is published:

$$\frac{\text{Published Safe Working Load x Published Factor of Safety}}{\text{New Factor of Safety}} = \text{New Safe Working Load}$$

SAFETY CONSIDERATIONS

All safe working loads shown in this book have been determined using the following considerations:

- Safe working loads are based on the product being in new condition, or like new condition.
- All hangers are produced for a specific beam flange width and should never be used on flange widths other than that which they were designed for.
- Hangers must be correctly positioned on top of the beam flange to ensure that Coil Bolts or Coil Rods are the proper distance from the edge of the flange.
- 90° hangers are designed so that there is a minimum clearance of 1/8" between the bolt and the flange.
- 45° and 15° hangers are designed so that they are set back 1/8" from the edge of the flange.

SAFETY CONSIDERATIONS (CONT.)

- All hangers must have full bearing under the end section.
- Improperly positioned hangers can drastically affect the hanger's safe working load.
- Hangers should be evenly spaced on the beams through proper sequencing of the concrete placement to minimize twisting or rotation of the hanger.
- Coil nuts must fully bear on hanger end sections. Hangers and other hardware are not to be subjected to side loading.
- Coil bolts, rods and related hardware must be proper length and diameter for required capacity.
- All coil bolts and rods must fully penetrate the nuts and extend no less than one rod diameter past the end of the nut.
- All possible loads to be applied to a hanger and bridge overhang bracket must be calculated by a qualified person.
- When hangers and related items are electro-plated or hot-dip zinc galvanized, they must be properly baked to relieve hydrogen embrittlement. Failure to do so may result in a drastic reduction of the product's safe working load.
- Use extreme caution when field welding. Welding may reduce material integrity and result in product failure.
- A certified welder should be used for all field welding with good working knowledge of materials, heat treatment and welding procedures.
- Do not weld to a casting unless approved by a licensed metallurgical engineer. Welding to a casting can cause extreme brittleness to develop, seriously compromising the casting's load carrying capability.
- Gamco does not guarantee any product that is altered after leaving the factory.
- Impact wrenches are not to be used to tighten coil bolts or coil rods that are part of a bridge deck forming system.

BRIDGE DECK ACCESSORY SAFE USE

Gamco recommends that a BH-60 Type 4A with interlock be used to support an overhang bracket when a screed machine is to ride on the overhang formwork. The contractor must install the overhang bracket, hanger and decking materials so that the supporting coil rod or coil bolt forms an angle of 45° ± 5° with the top of the exterior bridge beam. A qualified person must accurately calculate the hanger and overhang bracket spacing so that the applied loads are within the safe working load of the system. The Gamco engineering department can perform these calculations and provide the contractor with an overhang falsework detail drawing to be submitted to the DOT, for a nominal fee.

To comply with code requirements of various States' Department of Transportation, Gamco recommends that the following minimum loads be used when calculating the spacing of overhang brackets, hangers and interior bay hangers:

- **Interior Design Loads:** Use 160 pounds per cubic foot for determining the dead load of concrete and forms plus an additional 50 pounds per square foot for any live loads.
- **Exterior Design Loads:** Use 160 pounds per cubic foot for determining the dead load of concrete and forms, 50 pounds per square foot for any live loads, and appropriate wheel loads from any screed machine that will be supported by the overhang.

GUIDELINES FOR WELDING HALF HANGERS

1. Welds must be performed by a certified welder with proper equipment and codes.
2. Applying heat during the welding process always introduces the risk of altering the strength of the hanger, the reinforcing bar stirrups and studs. Therefore field tests should always be conducted to determine the strength of the welded connections to determine the actual safe working load (SWL) of the hanger. Actual SWL may be less than the optimum value shown in the hanger guide.
3. The SWL in the weld tables below are to be used as a general guideline only. The information is referenced from the American Welding Society (Miami, FL).

WELDING HALF HANGERS TO BEAMS

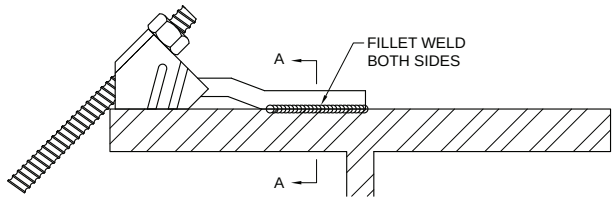

ELEVATION

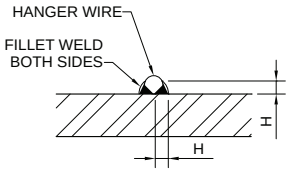

SECTION A-A

Fillet Weld Size (H)	SWL Per Lineal Inch of Weld
1/4"	2,400
5/16"	3,000
3/8"	3,600
7/16"	4,200

Note: Place half the required length of weld on each side of the strut wire. Minimum length of weld is 5 x H. The user should add 1/4" to the weld length for starting and stopping the arc. SWL provides a factor of safety of approximately 2 to 1.

WELDING HALF HANGERS TO STIRRUPS/STUDS

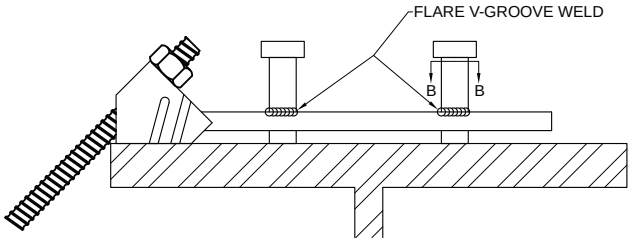

ELEVATION

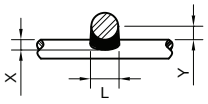

SECTION B-B

Safe Working Load Per Weld						
Rebar Stirrup Size	L Weld Length	Y Minimum	.375" Diameter Strut (x=3/16" Min.)		.440" Diameter Strut (x=7/32" Min.)	
			Grade 40 Stirrup	Grade 60 Stirrup	Grade 40 Stirrup	Grade 60 Stirrup
#4	1/2"	1/4"	1,350 lbs.	1,800 lbs.	1,600 lbs.	2,100 lbs.
#5	5/8"	5/16"	1,700 lbs.	2,200 lbs.	2,000 lbs.	2,600 lbs.
#6	3/4"	3/8"	2,050 lbs.	2,650 lbs.	2,400 lbs.	3,100 lbs.

Note: Values are based on the use of E70 series electrodes for welding to Grade 40 stirrups and E90 series electrodes for grade 60 stirrups. SWL provides a factor of safety of approximately 2 to 1. The table above is only a general guideline. Field tests should be performed on installed Half Hangers to establish actual safe working loads.

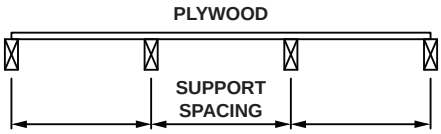

B-B Plyform Class I Loading (PSF) - Supports Continuous Over Three or More Spans						
Support Spacing (in.)	Plywood Used Strong Way (Face Grain Perpendicular to Supports)			Plywood Used Weak Way (Face Grain Parallel to Supports)		
	1/2" (5 ply)	5/8" (6 ply)	3/4" (7 ply)	1/2" (5 ply)	5/8" (6 ply)	3/4" (7 ply)
4	2945	3270	4110	1565	1770	2325
8	970	1260	1580	470	635	895
12	430	575	730	195	280	490
16	230	325	410	- -	120	270
19.2	115	210	285	- -	- -	155
24	- -	110	160	- -	- -	100

Deflection Limited to 1/270 of Span
Table Source: APA - The Engineered Wood Association, Table 3 and 4

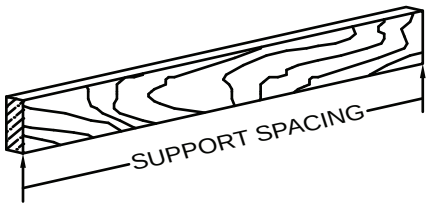

Lumber Joists - Safe Spacing of Supports (inches) - Single Span						
Uniform Load (PLF)*	Spruce - Pine - Fir E' = 1,300,000 psi F_v' = 170 psi					
	F'_b psi**					
	1595	1595	1380	1275	1170	1150
	Nominal Size Lumber, b x h (S4S) 19% Maximum Moisture Content					
	2x4	**4x4**	**2x6**	**2x8**	**2x10**	**2x12**
75	68	84	95	117	141	163
100	63	78	88	109	131	152
125	59	74	84	103	124	143
150	55	70	80	98	118	137
175	51	68	75	95	114	132
200	48	65	70	89	109	127
225	45	63	66	84	103	124
250	43	62	63	80	98	118
275	41	60	60	76	93	112
300	39	59	57	73	89	107
325	37	57	55	70	85	103
350	36	55	53	67	82	99
375	35	54	51	65	80	96
400	34	52	50	63	77	93
450	32	49	47	59	73	88
500	30	46	44	56	69	83
550	29	44	42	54	66	79
600	27	42	40	51	63	76

* Equals Design Load (Pounds per Square Foot x Spacing of Joists in Feet)
**F'b and F'v increased 25% for short load duration
Table derived from ACI SP-4(14)

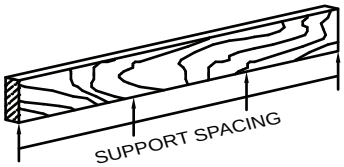

Lumber Joists - Safe Spacing of Supports (inches) - Continuous Over Three or More Spans						
Uniform Load (PLF)*	Spruce - Pine - Fir E' = 1,300,000 psi F_v' = 170 psi					
	F'_b psi**					
	1595	1595	1380	1275	1755	1590
	Nominal Size Lumber, b x h (S4S) 19% Maximum Moisture Content					
	2x4	**4x4**	**2x6**	**2x8**	**4x2**	**6x2**
75	79	98	111	137	49	57
100	74	91	104	128	45	52
125	68	86	98	121	41	48
150	62	82	91	115	39	45
175	57	79	84	107	37	43
200	54	77	79	100	35	41
225	51	74	74	94	34	40
250	48	72	70	89	33	38
275	46	70	67	85	31	37
300	44	67	64	81	30	36
325	42	64	62	78	29	34
350	40	62	59	75	28	33
375	39	60	57	73	27	32
400	38	58	55	70	26	31
450	35	55	52	66	24	29
500	32	52	50	63	23	28
550	29	49	47	60	22	26
600	28	47	44	57	21	25

* Equals Design Load (Pounds per Square Foot x Spacing of Joists in Feet)
**F'b and F'v increased 25% for short load duration
Table derived from ACI SP-4(14)

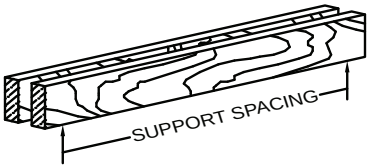

Lumber Double Ledgers - Safe Spacing of Supports (inches) - Single Span					
Uniform Load (PLF)*	Spruce - Pine - Fir E' = 1,300,000 psi F_v' = 170 psi				
	F'_b psi**				
	1595	1380	1275	1170	1150
	Nominal Size Lumber, b x h (S4S) 19% Maximum Moisture Content				
	2x4	**2x6**	**2x8**	**2x10**	**2x12**
200	63	88	109	131	152
250	59	84	103	124	143
300	55	80	98	118	137
350	51	75	95	114	132
400	48	70	89	109	127
450	45	66	84	103	124
500	43	63	80	98	118
550	41	60	76	93	112
600	39	57	73	89	107
650	37	55	70	85	103
700	36	53	67	82	99
750	35	51	65	80	96
800	34	50	63	77	93
850	33	48	61	75	90
900	32	47	59	73	88
950	31	45	58	71	85
1000	30	44	56	69	83

* Equals Design Load (Pounds per Square Foot x Spacing of Joists in Feet)
**F'b and F'v increased 25% for short load duration
Table derived from ACI SP-4(14)

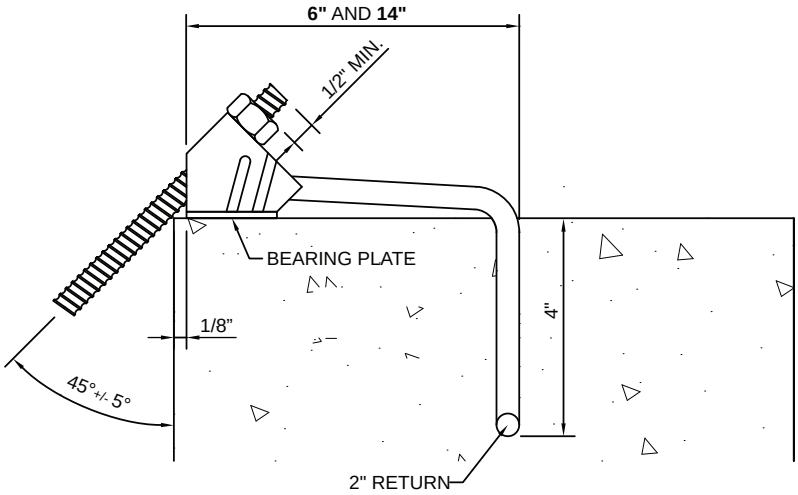

BH-24 TYPE 4APR
HD HALF HANGER
(45°/CAST-IN)

6,000 LB SWL*

BH-24 TYPE 9APR

11,300 LB SWL*

FEATURES: Hangers available in 6” and 14” lengths. Use 14” hangers in ‘Bulb-Tee’ beam applications.

Hangers are equipped with a bearing plate to disperse the point load, helping to prevent edge spalling of concrete. Galvanized finish is standard.

INSTALLATION: Install the BH-24 TYPE 4/9APR Hanger into the concrete maintaining a 1/4” setback from the edge of the beam. Vibrate the concrete around the embedded strut wire to eliminate any voids or air pockets. The bearing plate must rest completely flat on the surface of the concrete.

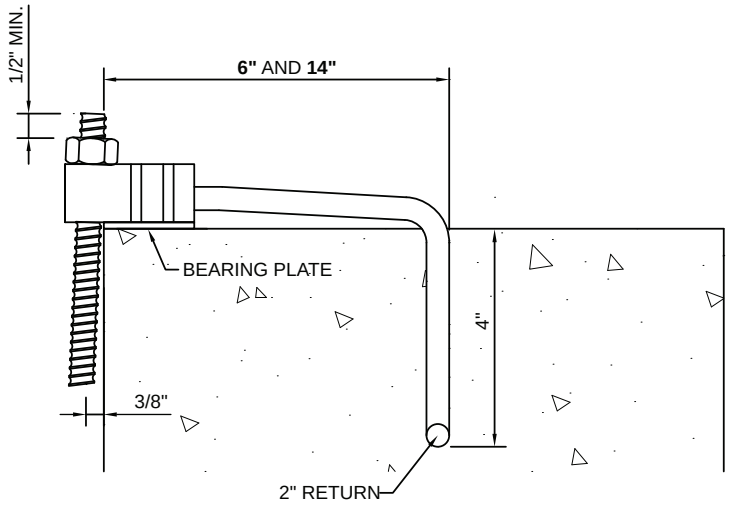

BH-24 TYPE 4PR
HD HALF HANGER
(90°/CAST-IN)

6,000 LB SWL*

BH-24 TYPE 9PR

11,300 LB SWL*

FEATURES: Hangers available in 6” and 14” lengths. Use 14” hangers in ‘Bulb-Tee’ beam applications.

Hangers are equipped with a bearing plate to disperse the point load, helping to prevent edge spalling of concrete. Galvanized finish is standard.

INSTALLATION: Install the BH-24 TYPE 4/9PR Hanger into the concrete keeping the bearing plate flush with the edge of the beam. Vibrate the concrete around the embedded strut wire to eliminate any voids or air pockets. The bearing plate must rest completely flat on the surface of the concrete.

*** WARNING:** The contractor and precaster must be certain of safe spacing of the hangers. Gamco Engineering can assist in calculating safe spacing. Actual hanger capacity is dependent on beam design strength, concrete strength, and reinforcement. To use hanger at full capacity, the contractor must take this into consideration and reduce hanger capacity if necessary.

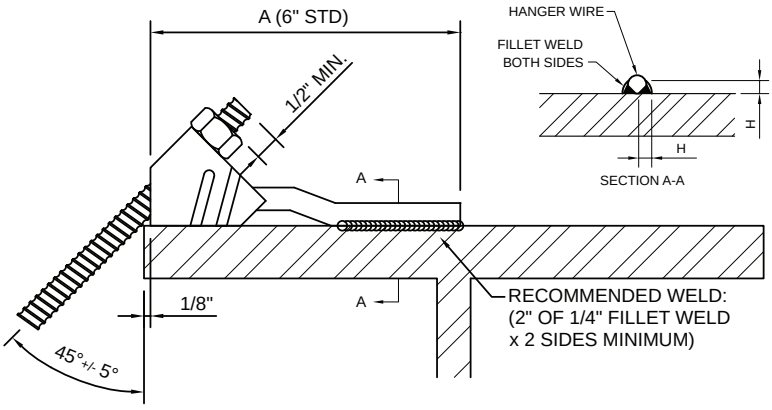

BH-24 TYPE 4AS

HD HALF HANGER (45°/WELD)

6,000 LB SWL (REFER TO WELD CHART)

BH-24 TYPE 9AS

11,300 LB SWL (REFER TO WELD CHART)

FEATURES: Hanger has a jogged tail for welding to the flange of a steel beam or girder. Standard hanger length is 6". If a non-standard length is required please specify the 'A' dimension.

INSTALLATION: Hanger must be welded in accordance to the guideline and warning on this page. It is recommended that the hanger head be set back 1/8" from the edge of the flange.

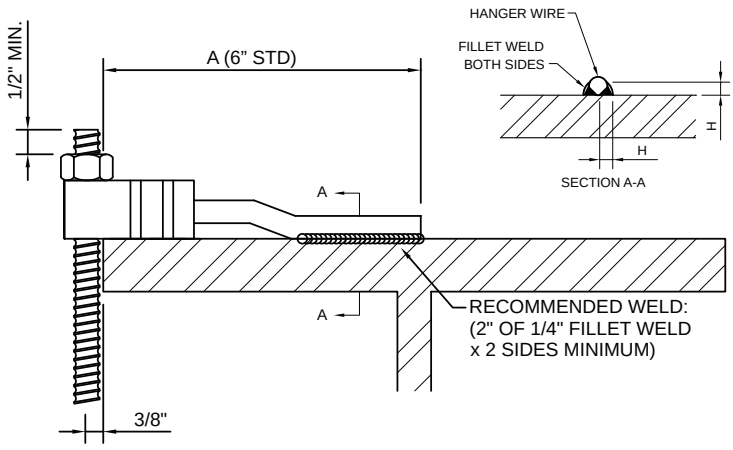

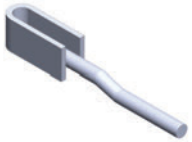

BH-24 TYPE 4S

HD HALF HANGER (90°/WELD)

6,000 LB SWL (REFER TO WELD CHART)

BH-24 TYPE 9S

11,300 LB SWL (REFER TO WELD CHART)

FEATURES: Hanger has a jogged tail for welding to the flange of a steel beam or girder. Standard hanger length is 6". If a non-standard length is required please specify the 'A' dimension.

INSTALLATION: Hanger must be welded in accordance to the guideline and warning on this page. It is recommended that the hanger head cantilever 3/8" from the edge of the flange to the center of the bolt.

WELDING BH-24 STYLE HANGERS TO BEAMS

Fillet Weld Size (H)	SWL Per Lineal Inch of Weld
1/4"	2,400
5/16"	3,000
3/8"	3,600
7/16"	4,200

Note: Place half the required length of weld on each side of the strut wire. Minimum length of weld is 5 x H. The user should add 1/4" to the weld length for starting and stopping the arc. SWL provides a factor of safety of approximately 2 to 1.

GUIDELINES FOR WELDING HALF HANGERS:

1. Welds must be performed by a certified welder with proper equipment and codes.
2. Applying heat during the welding process always introduces the risk of altering the strength of the hanger, the reinforcing bar stirrups and studs. Therefore field tests should always be conducted to determine the strength of the welded connections to determine the actual safe working load (SWL) of the hanger. Actual SWL may be less than the optimum value shown in the hanger guide.
3. The SWL in the weld tables below are to be used as a general guideline only. The information is referenced from the American Welding Society (Miami, FL).

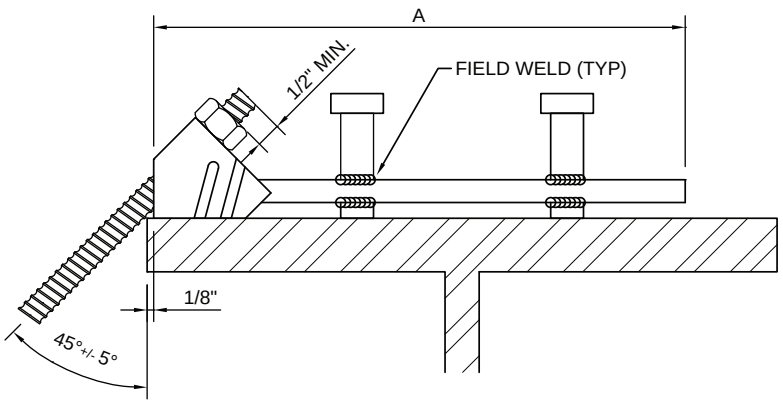

BH-26 TYPE 4A
HD HALF HANGER
(45°/WELD)

6000 LB SWL*

FEATURES: Hanger has a straight tail for welding to stirrups, studs etc. Standard hanger length is 12". Lengths up to 36" are available, please specify the 'A' dimension.

INSTALLATION: Hanger must be welded in accordance to the guideline and warning on this page. An 1/8" setback from the edge of flange is recommended.

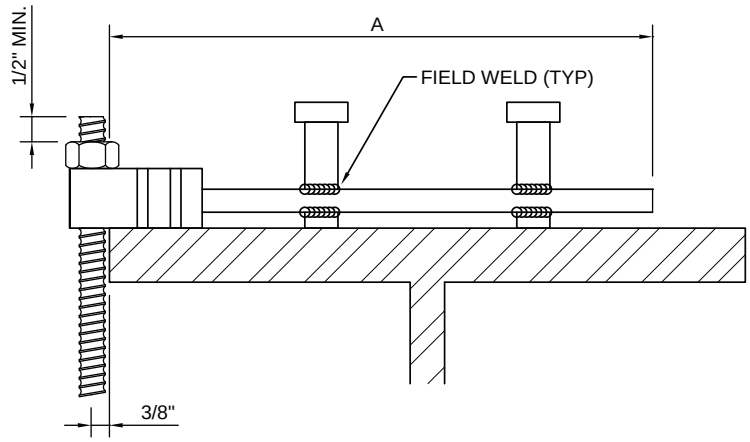

BH-26 TYPE 4
HD HALF HANGER
(90°/WELD)

6000 LB SWL*

FEATURES: Hanger has a straight tail for welding to stirrups, studs etc. Standard hanger length is 12". Lengths up to 36" are available, please specify the 'A' dimension.

INSTALLATION: Hanger must be welded in accordance to the guideline and warning on this page.

WELDING BH-25 STYLE HANGERS TO STIRRUPS/STUDS

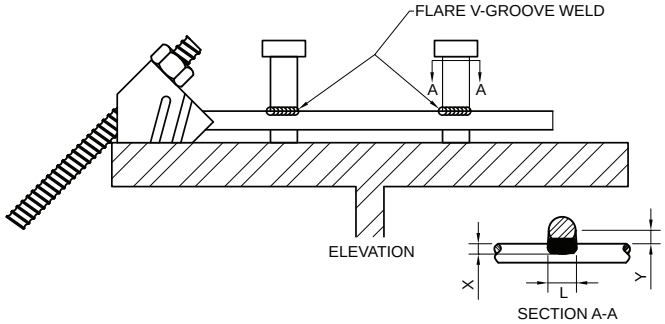

GUIDELINES FOR WELDING HALF HANGERS:

1. Welds must be performed by a certified welder with proper equipment and codes.
2. Applying heat during the welding process always introduces the risk of altering the strength of the hanger, the reinforcing bar stirrups and studs. Therefore field tests should always be conducted to determine the strength of the welded connections to determine the actual safe working load (SWL) of the hanger. Actual SWL may be less than the optimum value shown in the hanger guide.
3. The SWL in the weld tables below are to be used as a general guideline only. The information is referenced from the American Welding Society (Miami, FL).

WARNING: *Actual capacity of hanger is dependent on the quality and strength of the studs or stirrups, and the quality and strength of the weld to them.

Safe Working Load Per Weld

Rebar Stirrup Size	Lw Weld Length	Y Minimum	.375" Diameter Strut (x=3/16" Min.)		.440" Diameter Strut (x=7/32" Min.)	
			Grade 40 Stirrup	Grade 60 Stirrup	Grade 40 Stirrup	Grade 60 Stirrup
#4	1/2"	1/4"	1,350 lbs.	1,800 lbs.	1,600 lbs.	2,100 lbs.
#5	5/8"	5/16"	1,700 lbs.	2,200 lbs.	2,000 lbs.	2,600 lbs.
#6	3/4"	3/8"	2,050 lbs.	2,650 lbs.	2,400 lbs.	3,100 lbs.

Note: Values are based on the use of E70 series electrodes for welding to Grade 40 stirrups and E90 series electrodes for grade 60 stirrups. SWL provides a factor of safety of approximately 2 to 1. The table above is only a general guideline. Field tests should be performed on installed Half Hangers to establish actual safe working loads.

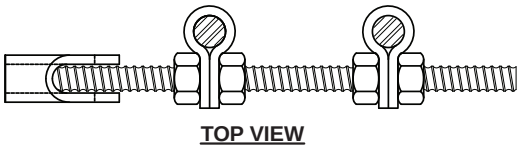

TOP VIEW

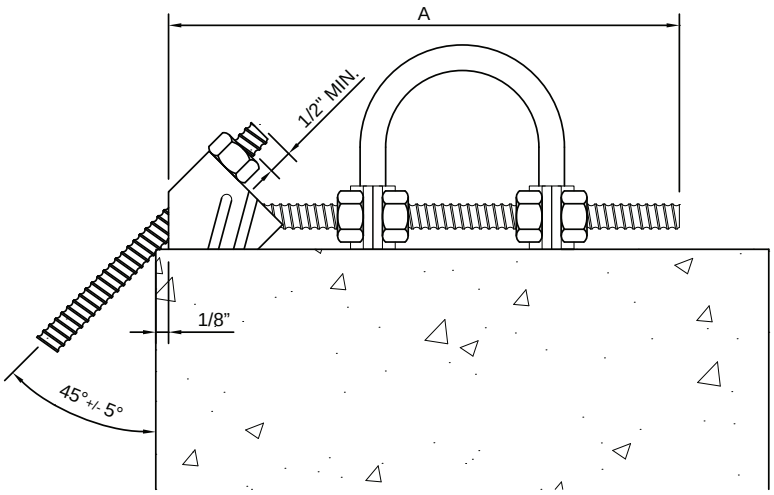

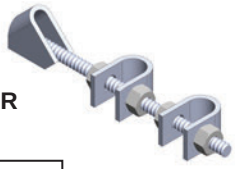

BH-25 TYPE 1A
ADJUSTABLE HALF HANGER (45°/CLIPS)

3000 LB SWL* (USING 2-CLIPS)

FEATURES: Hanger has a straight tail of 1/2" coil rod and is clamped to stirrups or studs using provided clips and coil nuts. The standard hanger length is 8". Lengths up to 36" are available, please specify the 'A' dimension. Also clip size must be specified.

Clip #1 for #4 and #5 (1/2" and 5/8" diameters)
Clip #2 for #6, #7, and #8 (3/4" to 1" diameters)

INSTALLATION: Hanger must be clamped to stirrups or studs using the appropriate size clip. Nuts must be tightened so that the clip tightly pinches the stirrup or stud. An 1/8" setback from the edge of flange is recommended.

Warning: Do not use if a screed machine is running on the overhang. In this situation use the BH-25 TYPE 4A HD Hanger.

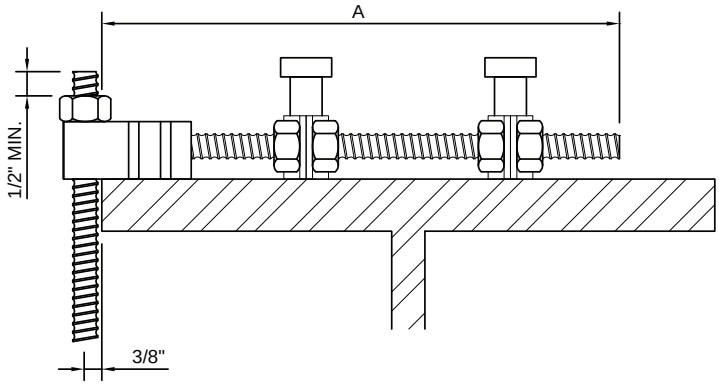

BH-25 TYPE 1
ADJUSTABLE HALF HANGER (90°/CLIPS)

3000 LB SWL* (USING 1-CLIP)

FEATURES: Hanger has a straight tail of 1/2" coil rod and is clamped to stirrups or studs using provided clips and coil nuts. The standard hanger length is 8". Lengths up to 36" are available, please specify the 'A' dimension. Also clip size must be specified.

Clip #1 for #4 and #5 (1/2" and 5/8" diameters)
Clip #2 for #6, #7, and #8 (3/4" to 1" diameters)

INSTALLATION: Hanger must be clamped to stirrups or studs using the appropriate size clip. Nuts must be tightened so that the clip tightly pinches the stirrup or stud.

WARNING: *Actual capacity is dependent on the strength of the stud or stirrup. Also to achieve full safe working load, the coil nuts must compress the clips to the studs or stirrups. Failure to achieve this tight fit will significantly reduce the safe working load of the hanger. Field tests should be performed to establish actual safe working loads. **Do not use if a screed machine is running on the overhang. In this situation use the BH-25 TYPE 4A HD Hanger.**

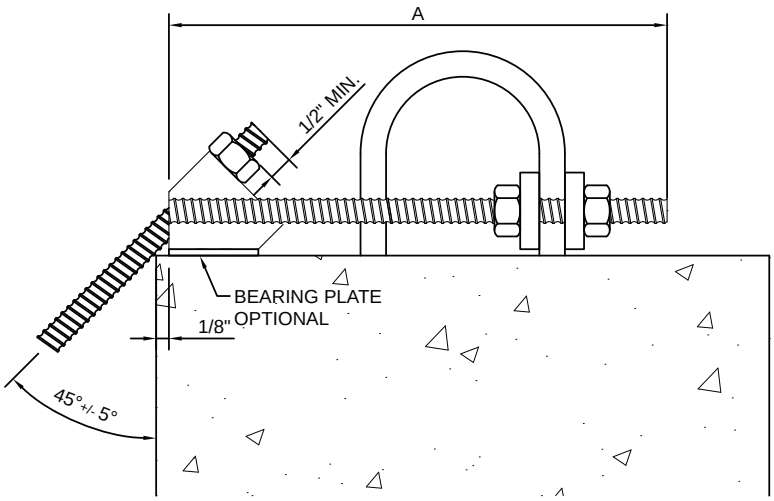

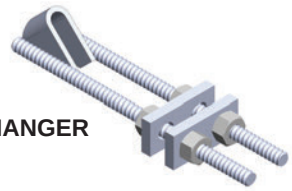

BH-25 TYPE 4A
HD ADJUSTABLE HALF HANGER (45°/PLATES)

6000 LB SWL*

FEATURES: Hanger has a double straight tail of 1/2" coil rod and is clamped to stirrups or studs using provided plates and coil nuts. The standard hanger length is 8". Lengths up to 36" are available, please specify the 'A' dimension. Hanger fits up to a #8 rebar or 1" diameter stud.

Recommended for use when a screed machine is running on the overhang.

INSTALLATION: Hanger must be clamped to stirrup or stud with the provided plates. Nuts must be tightened so the plates tightly pinch the stirrup or stud (the plates should just start to bend). An 1/8" setback from the edge of the flange is recommended.

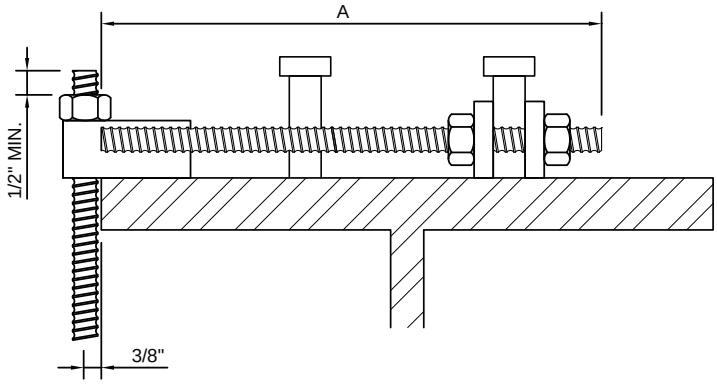

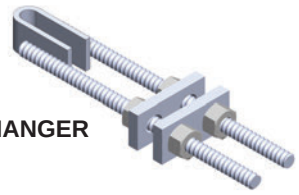

BH-25 TYPE 4
HD ADJUSTABLE HALF HANGER (90°/PLATES)

6000 LB SWL*

FEATURES: Hanger has a double straight tail of 1/2" coil rod and is clamped to stirrups or studs using provided plates and coil nuts. The standard hanger length is 8". Lengths up to 36" are available, please specify the 'A' dimension. Hanger fits up to a #8 rebar or 1" diameter stud.

INSTALLATION: Hanger must be clamped to stirrup or stud with the provided plates. Nuts must be tightened so the plates tightly pinch the stirrup or stud (the plates should just start to bend).

WARNING: *Actual capacity is dependent on the strength of the stud or stirrup. Also to achieve full safe working load, the coil nuts must compress the plates to the studs or stirrups. Failure to achieve this tight fit will significantly reduce the safe working load of the hanger. Field tests should be performed to establish actual safe working loads.

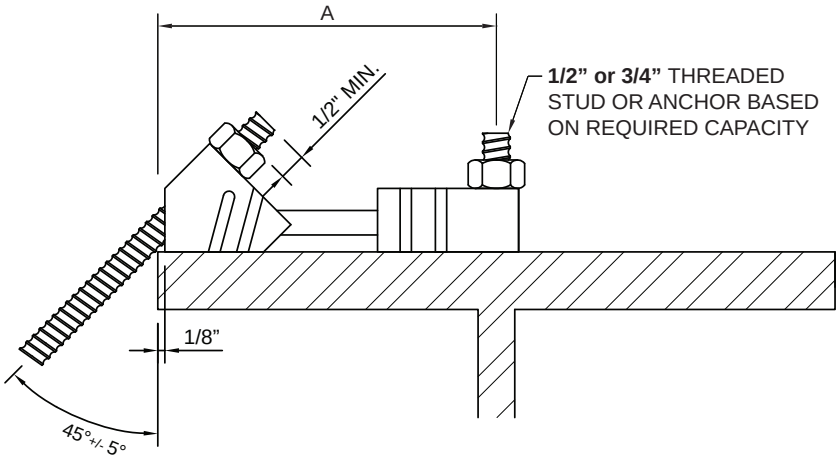

BH-64 TYPE 4AN
HD HALF HANGER (45°/STUD)

6,000 LB SWL*

BH-64 TYPE 9AN

11,300 LB SWL*

FEATURES: HD Hanger without the interlock on the 90° end for attachment with a threaded stud or anchor. Specify 1/2" or 3/4" stud size for 90° end. Specify 'A' dimension from edge of flange to center of stud. Minimum 'A' dimension is 5".

INSTALLATION: An 1/8" setback from the edge of the flange is recommended.

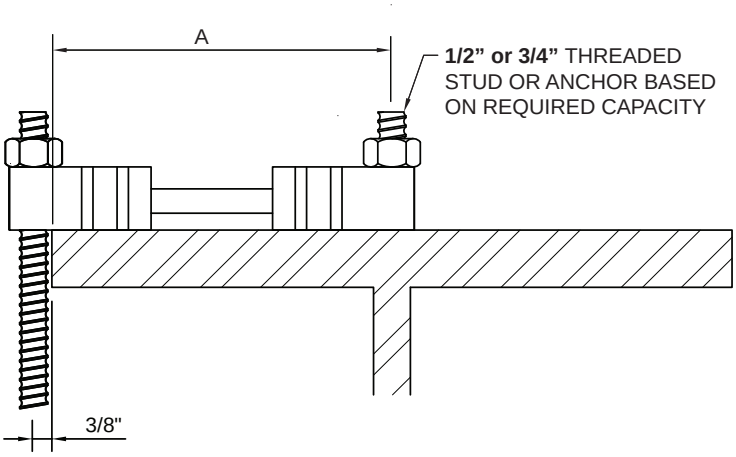

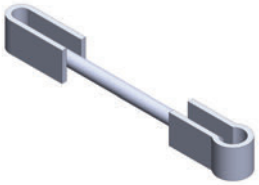

BH-64 TYPE 4N
HD HALF HANGER (90°/STUD)

6,000 LB SWL*

BH-64 TYPE 9N

11,300 LB SWL*

FEATURES: HD Hanger without the interlock on the 90° end for attachment with a threaded stud or anchor. Specify 1/2" or 3/4" stud size for 90° end. Specify 'A' dimension from end of hanger to center of stud. Minimum 'A' dimension is 5".

INSTALLATION: Nut must be securely tightened to hold the 90° end in place.

WARNING: *Actual capacity of hanger is dependent on the strength of the studs and the quality and strength of the weld fastening them to the beam. Welding must be completed by a certified welder and field testing of the strength of the stud should be conducted by the contractor to establish actual strength. Hanger capacity should be adjusted accordingly.

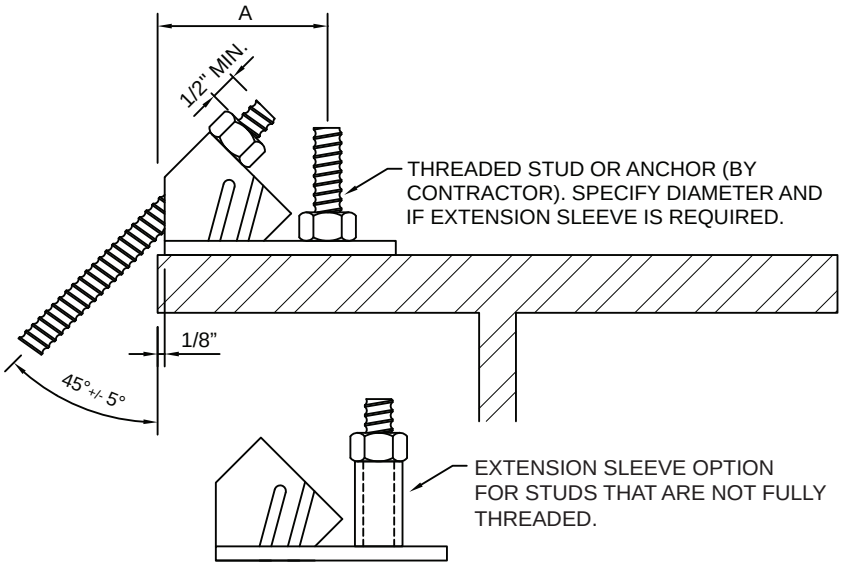

BH-65 TYPE 4A
HD HALF HANGER (45°/STUD)

6000 LB SWL*

FEATURES: HD Hanger for attachment with a threaded stud or anchor that is located close to the edge of the flange. Specify stud size for 90° end. Specify 'A' dimension from edge of flange to center of stud. Minimum 'A' dimension is 3". An extension sleeve is optional if the stud or anchor is not fully threaded.

INSTALLATION: An 1/8" setback from the edge of the flange is recommended. Nut must be securely tightened to hold the hanger place.

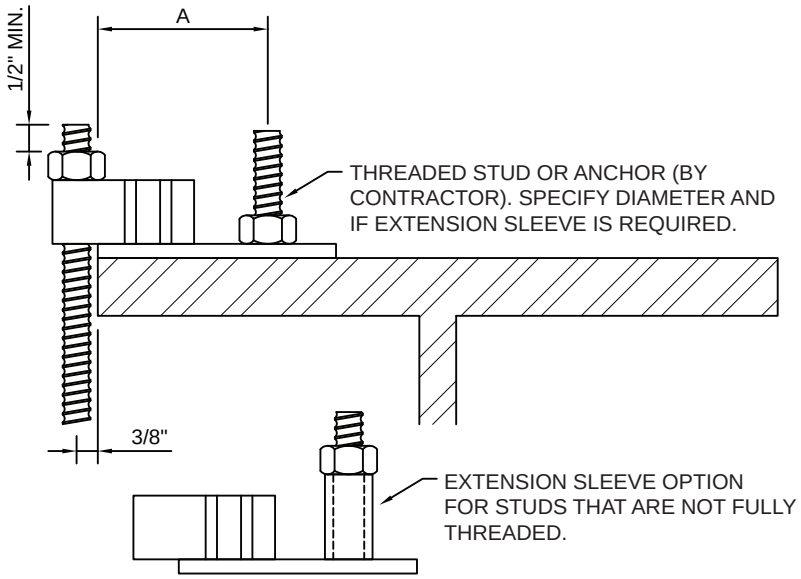

BH-65 TYPE 4
HD HALF HANGER (90°/STUD)

6000 LB SWL*

FEATURES: HD Hanger for attachment with a threaded stud or anchor that is located close to the edge of the flange. Specify stud size for 90° end. Specify 'A' dimension from edge of flange to center of stud. Minimum 'A' dimension is 3". An extension sleeve is optional if the stud or anchor is not fully threaded.

INSTALLATION: Nut must be securely tightened to hold the hanger in place.

WARNING: *Actual capacity of hanger is dependent on the strength of the studs and the quality and strength of the weld fastening them to the beam. Welding must be completed by a certified welder and field testing of the strength of the stud should be conducted by the contractor to establish actual strength. Hanger capacity should then be adjusted accordingly.

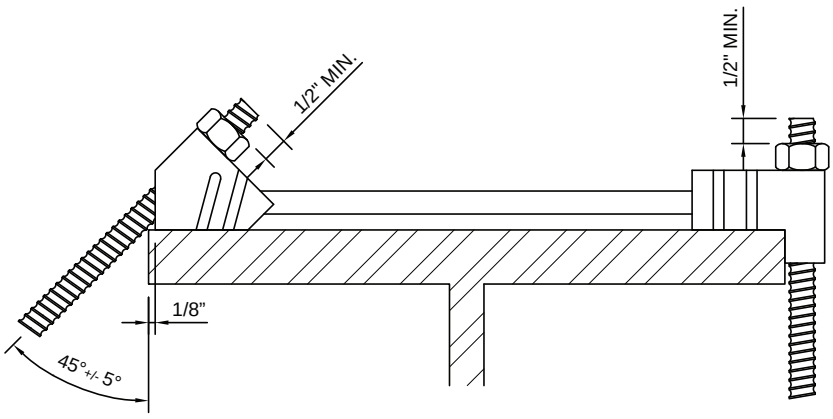

BH-60 TYPE 4A
HD HANGER
(45°/90° WITH INTERLOCK)

6,000 LB SWL PER SIDE

BH-60 TYPE 9A

11,300 LB SWL PER SIDE

FEATURES: Interlock on 90° end counters lateral forces created by the loading of the 45° end. Use this hanger if a finishing machine is running on the overhang. Specify the flange width to the nearest 1/16" when ordering.

INSTALLATION: An 1/8" setback from the edge of the flange is recommended. The 45° end should never extend past the end of the flange. Ensure that one side of the hanger is not loaded before the other end is secured.

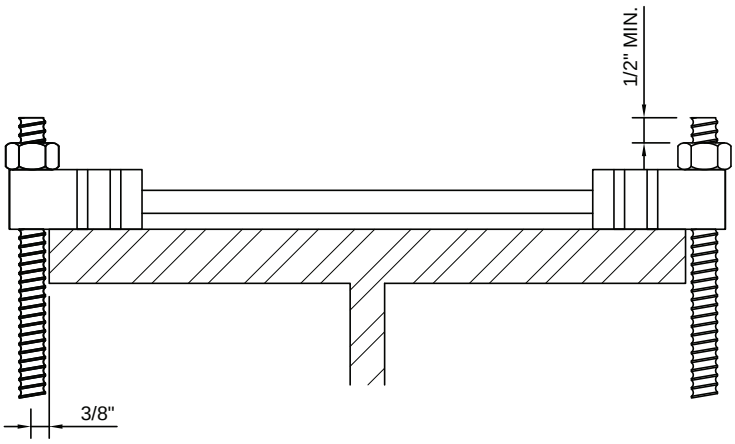

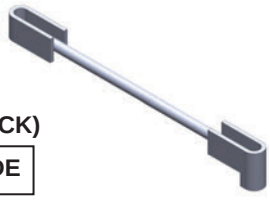

BH-60 TYPE 4
HD HANGER
(90°/90° WITH INTERLOCK)

6,000 LB SWL PER SIDE

BH-60 TYPE 9

11,300 LB SWL PER SIDE

FEATURES: HD Hanger for higher loads or wider flange widths. Hanger can be fabricated with 0, 1 or 2 interlocking ends. Specify the flange width to the nearest 1/16" when ordering.

INSTALLATION: Ensure that one side of the hanger is not loaded before the other end is secured.

WARNING: The contractor must be certain of safe spacing of the hangers based on job conditions, bridge overhang bracket geometry and loading conditions. Please contact Gamco Engineering for assistance calculating safe hanger spacing.

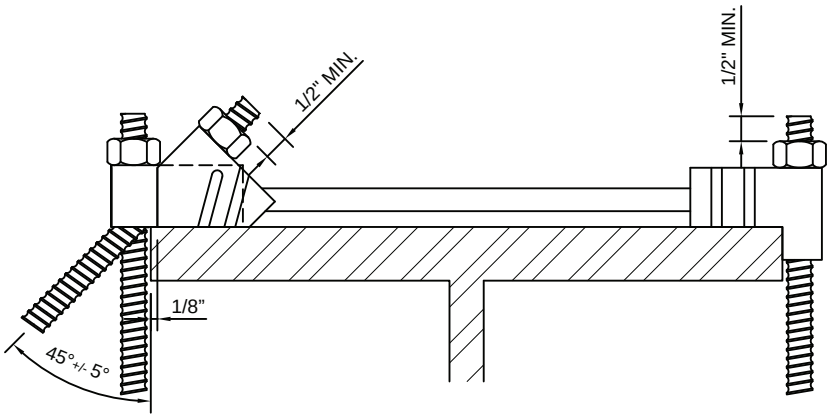

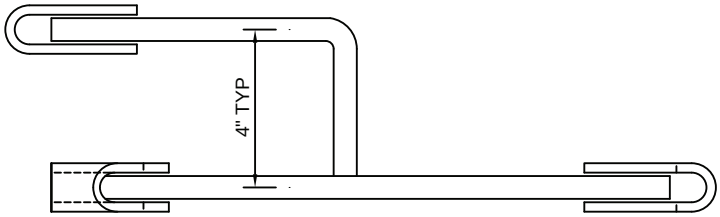

TOP VIEW

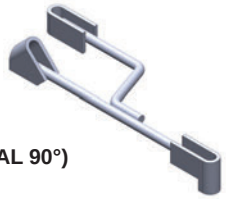

BH-60 TYPE 1-4A

HD HANGER
(90°/45° WITH SUPPLEMENTAL 90°)

MAIN HANGER: 6000 LB SWL PER SIDE

SUPPLEMENTAL END: 6000 LB SWL ONLY AFTER IT HAS BEEN CAST INTO CONCRETE

FEATURES: Interlock on 90° end counters lateral forces created by the loading of the 45° end. Use this hanger if a finishing machine is running on the overhang. Supplemental end is used as a hanger for a secondary pour such as a closure pour. Specify the flange width to the nearest 1/16" when ordering.

INSTALLATION: It is recommended that the 45° hanger head be set back 1/8" from the edge of the flange. The 45° end should never extend past the end of the flange. Ensure that one side of the hanger is not loaded before the other end is secured. DO NOT hang anything except a bolt from the supplemental 90° end until it is cast in concrete and the concrete has sufficiently cured.

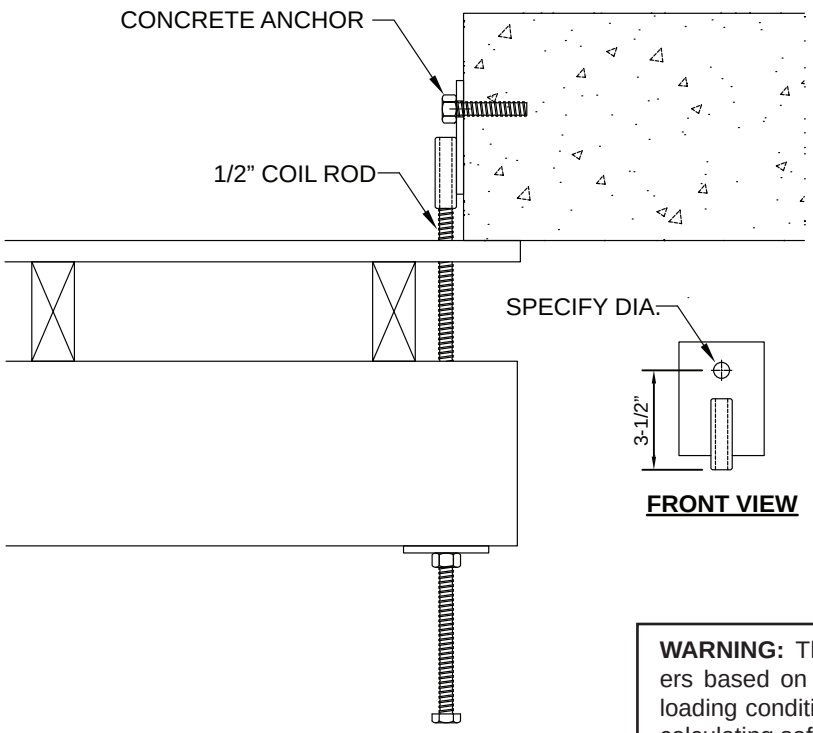

FRONT VIEW

BH-70 TYPE 4

HD HANGER 90°

6000 LB SWL*

FEATURES: HD 90° hanger used in a shear application on a wall, beam, or slab edge. Specify the anchor diameter when ordering.

INSTALLATION: Follow the recommendations of the anchor manufacturer for minimum embedment and edge setback distance.

***WARNING: CAPACITY OF HANGER IS 6000 LBS BUT IS LIMITED TO THE CAPACITY OF THE ANCHOR.**

WARNING: The contractor must be certain of safe spacing of the hangers based on job conditions, bridge overhang bracket geometry and loading conditions. Please contact Gamco Engineering for assistance calculating safe hanger spacing.

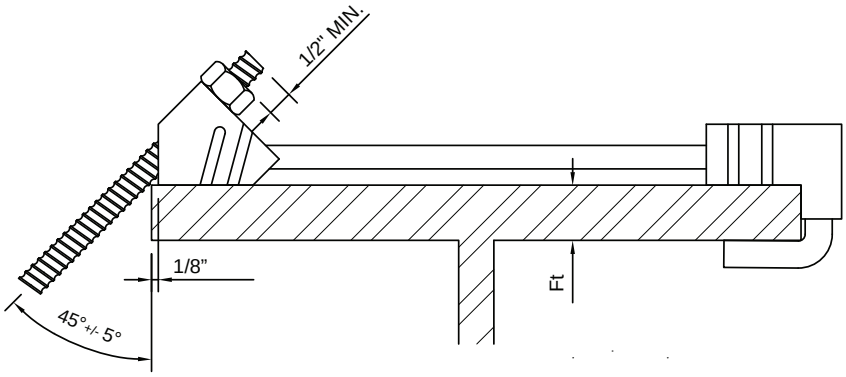

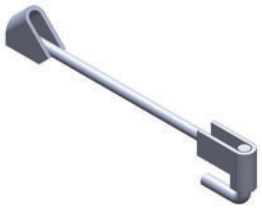

BH-68 TYPE 4A
HD HALF HANGER (45°/HOOK)

5,500 LB SWL*

BH-68 TYPE 9A

10,300 LB SWL*

FEATURES: Interlock on 90° end counters lateral forces created by the loading of the 45° end. Integrated flange hook replaces the interior deck bolt or hook bolt. Use this hanger if a finishing machine is running on the overhang. Specify the flange width and thickness (Ft) to the nearest 1/16” when ordering.

INSTALLATION: It is recommended that the hanger head be set back 1/8” from the edge of the flange. The 45° end should never extend past the end of the flange. Ensure the hook is fully engaged on flange.

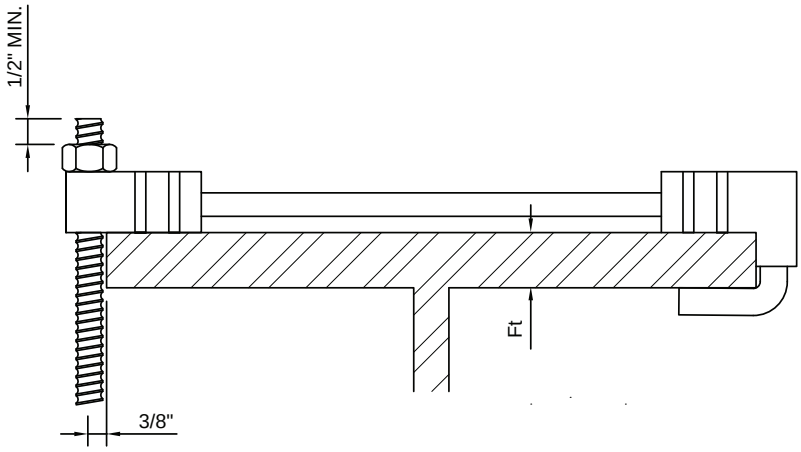

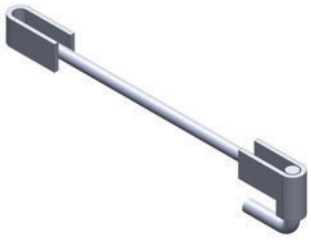

BH-68 TYPE 4
HD HALF HANGER (90°/HOOK)

5,500 LB SWL*

BH-68 TYPE 9

10,300 LB SWL*

FEATURES: Integrated flange hook replaces the interior deck bolt or hook bolt. Specify the flange width and thickness (Ft) to the nearest 1/16” when ordering.

INSTALLATION: Ensure the hook is fully engaged on flange.

WARNING: *SWL values shown are for flange thicknesses up to 2”. Please contact Gamco’s engineering for flange thicknesses greater than 2”. To achieve full SWL there must not be more than 1/16” ‘slop’ on the hook end of the hanger (between the hook and the flange). More than 1/16” slop will severely reduce the hanger capacity. The contractor must be certain of safe spacing of the hangers based on job conditions, bridge overhang bracket geometry and loading conditions. Please contact Gamco Engineering for assistance calculating safe hanger spacing.

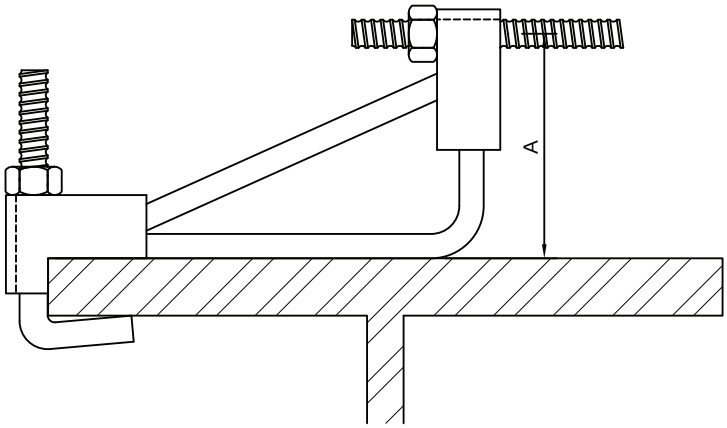

BH-85 TYPE 1
TIE BAR HANGER W/ INTERLOCK END

3000 LB SWL*

FEATURES: Hanger has a bent up 90° end for holding a threaded tie bar at the appropriate height 'A'.

INSTALLATION: Hanger must be clamped to flange with hook bolt.

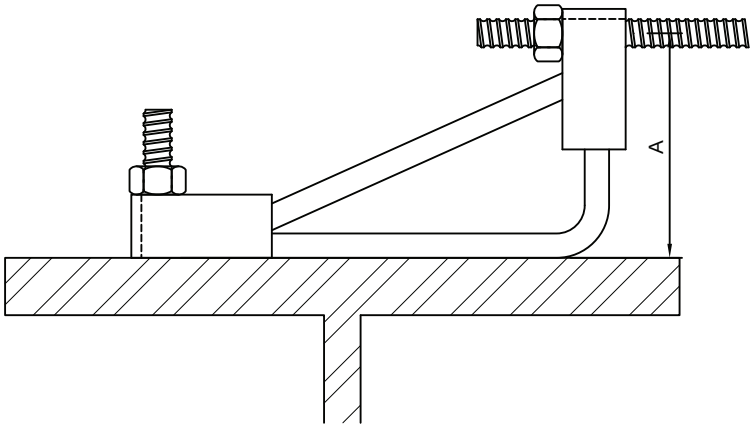

BH-85 TYPE 2
TIE BAR HANGER FOR STUD

3000 LB SWL*

FEATURES: Hanger has a bent up 90° end for holding a threaded tie bar at the appropriate height 'A'.

INSTALLATION: Hanger must be clamped to flange with a 1/2" or 3/4" threaded stud welded to flange.

WARNING: The contractor must be certain of safe spacing of the hangers based on job conditions. The strength of the hanger using welded studs should be field tested to determine actual strength.

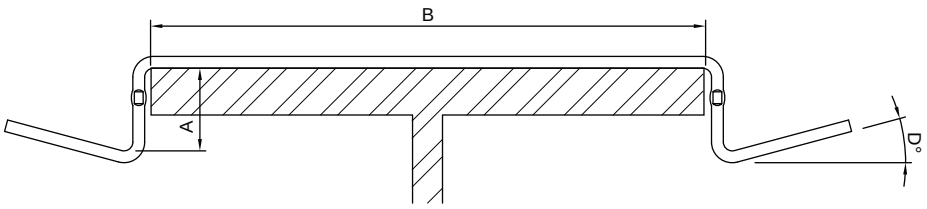

A = FLANGE THICKNESS + PLYWOOD THICKNESS - 1/8" FOR TIGHTNESS
B = ACTUAL BEAM FLANGE
D = UPBEND (5°, 15°, or 45°)

BH-28 TYPE 1

INTERIOR HAUNCH CARRIER

125 LB SWL* PER SIDE

The BH-28 haunch carrier is used to support haunch or filler strips when forming the interior bays of bridge decks. BH-28 haunch carriers are made with a standard 1" break back for easy stripping.

To order please specify:
(A) Actual Flange Thickness + Plywood Thickness - 1/8"
(B) Actual Flange Width
(D) Up-Bend (5°, 15° or 45°)

*NOTE: SWL Provides a factor of safety of 2 to 1

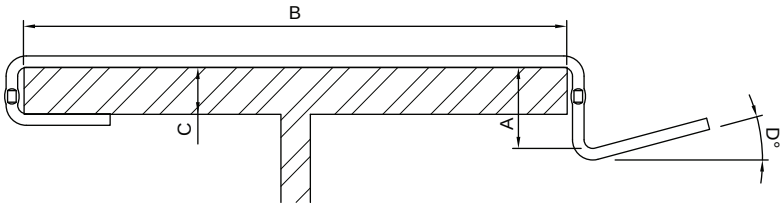

A = FLANGE THICKNESS + PLYWOOD THICKNESS - 1/8" FOR TIGHTNESS
B = ACTUAL BEAM FLANGE
C = ACTUAL BEAM FLANGE THICKNESS
D = UPBEND (5°, 15°, or 45°)

BH-28 TYPE 2

EXTERIOR HAUNCH CARRIER

125 LB SWL*

The BH-28 haunch carrier is used to support haunch or filler strips when forming the interior bays of bridge decks on the exterior beams. BH-28 haunch carriers are made with a standard 1" break back for easy stripping.

To order please specify:
(A) Actual Flange Thickness + Plywood Thickness - 1/8"
(B) Actual Flange Width
(C) Actual Flange Thickness
(D) Up-Bend (5°, 15° or 45°)

*NOTE: SWL Provides a factor of safety of 2 to 1.

BH-79 TYPE 4A

45° EXTERIOR HOOK BOLT

The BH-79 exterior hook bolt is used to temporarily lock in the exterior end of a 90/45 hanger, allowing contractor to hang BH-49 Bridge Overhang Brackets at a later time.

Note: Will handle up to 3" thick flange. Bolts must only be removed one at at time.

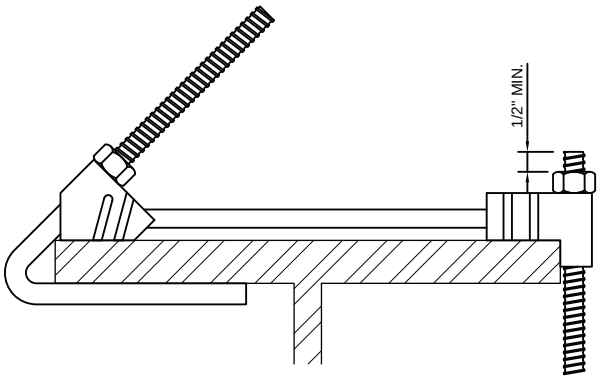

HOOK BOLT

- SWL PROVIDES A FACTOR OF SAFETY OF 2 to 1
- ELECTRO-GALVANIZED
- CUSTOM SIZES AVAILABLE

Hook Bolt Size L	Maximum Flange Thickness	Thread Length T	SWL (lbs.)
4-1/2"	2-1/2"	3-1/2"	6,000
6"	4"	4-1/2"	6,000

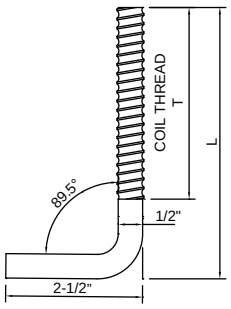

BH-80

ADJUSTABLE JOIST HANGER

6000 LB SWL*

FEATURES: One adjustable joist hanger does the work of a cast-in hanger, coil deck bolt, plate washer and two coil nuts. However unlike cast-in hangers that are 'lost' in the pour, the joist hangers are fully reusable. All lumber and decking material is recovered for reuse. Screwjacks allow for easy deck elevation adjustment.

INSTALLATION: Adjustable Joist Hangers must be installed at the prescribed spacing based on joist size, span length, and loading. Plywood decking deflection must also be taken into consideration. Do not use on flanges less than 4" thick unless a standoff back to the beam web is used.

RENTAL OR PURCHASE AVAILABLE.

*NOTE: SWL Provides a factor of safety of 2.5 to 1

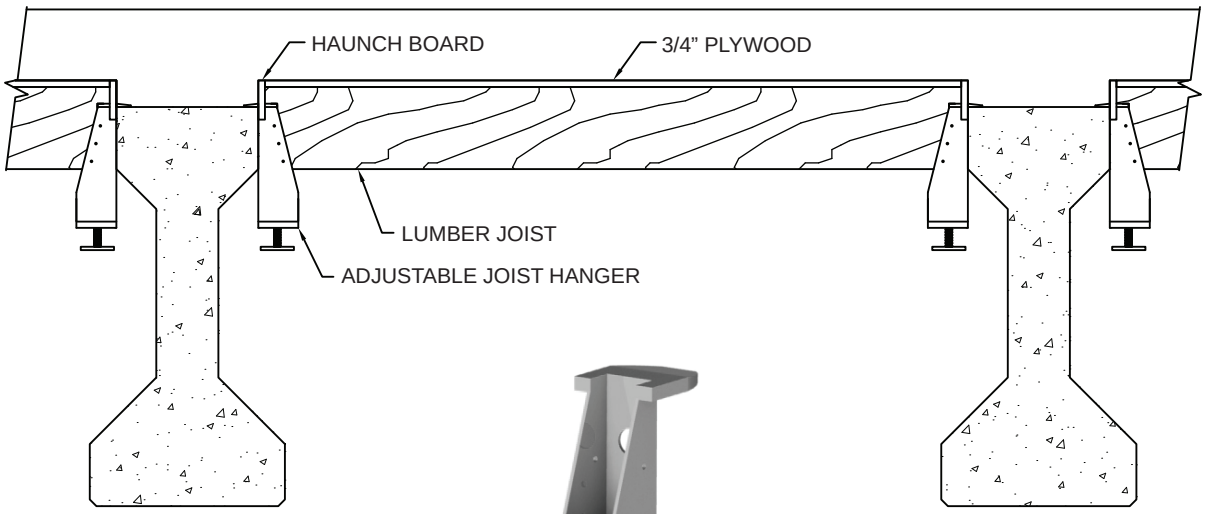

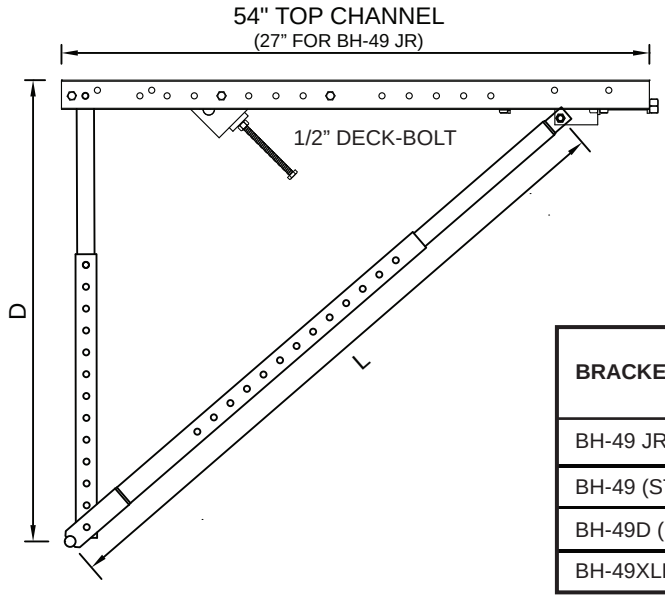

BH-49JR, BH-49, BH-49D, BH-49XLD
STD. BRIDGE OVERHANG BRACKET

FEATURES: The BH-49 Series Bridge Overhang Bracket is a fully adjustable falsework bracket that can be used on steel beams/girders, precast beams and box beams. The bracket can be used in shear wall applications for formwork and walkway support. Accessories such as the wall plate assembly, guardrail pocket, and extenders are available.

BRACKET TYPE	VERTICAL LEG ADJUSTMENT RANGE 'D'	DIAGONAL LEG ADJUSTMENT RANGE 'L'	DIAGONAL LEG CAPACITY*
BH-49 JR (JUNIOR SIZE)	14"-28"	36" MAX	3750 LBS
BH-49 (STANDARD)	14"-50"	70" MAX	3750 LBS
BH-49D (DEEP)	50"-70"	90" MAX	3750 LBS
BH-49XLD (EXTRA DEEP)	70"-100"	108" MAX	2500-3250 LBS

*FOS of 2:1

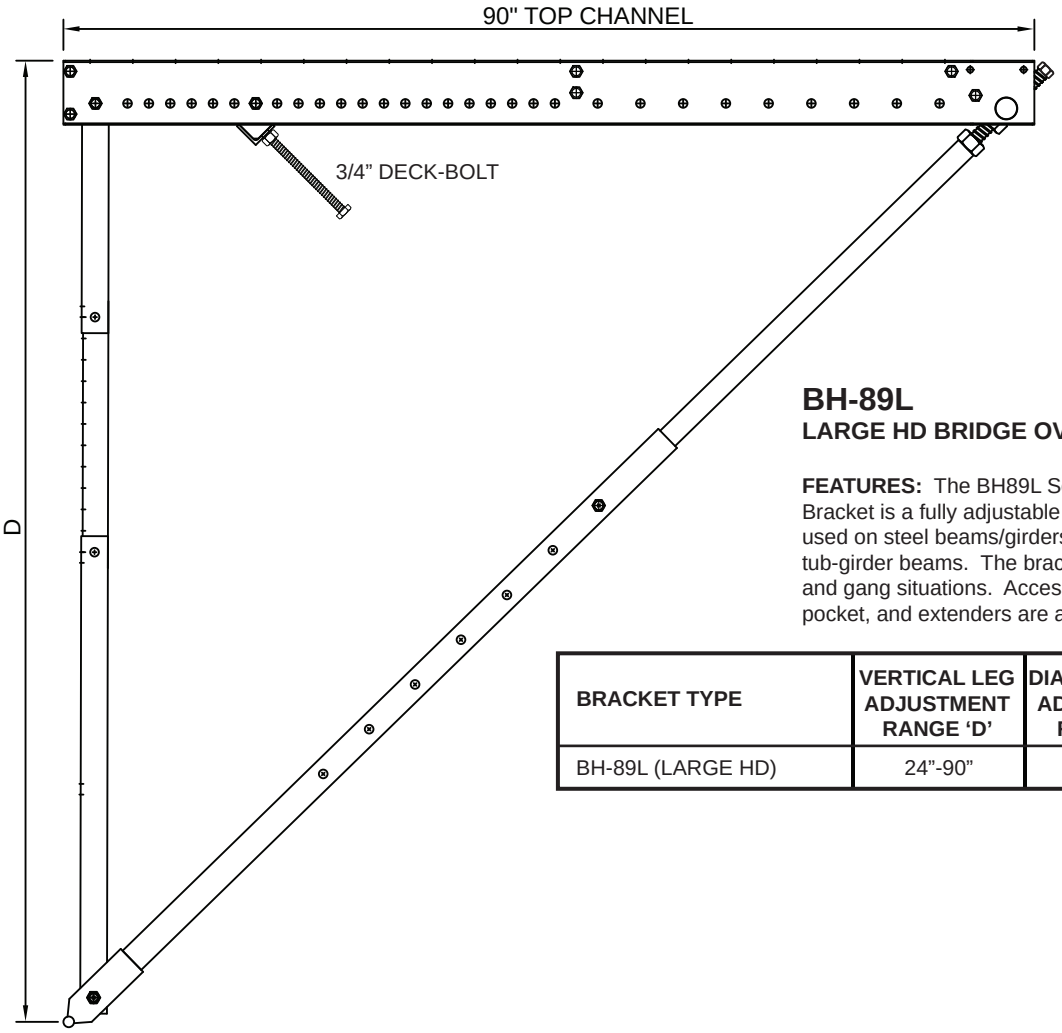

BH-89L
LARGE HD BRIDGE OVERHANG BRACKET

FEATURES: The BH89L Series Bridge Overhang Bracket is a fully adjustable falsework bracket that can be used on steel beams/girders, precast beams and tub-girder beams. The bracket is used in large overhang, and gang situations. Accessories such as the guardrail pocket, and extenders are available.

BRACKET TYPE	VERTICAL LEG ADJUSTMENT RANGE 'D'	DIAGONAL LEG ADJUSTMENT RANGE 'L'	DIAGONAL LEG CAPACITY*
BH-89L (LARGE HD)	24"-90"	122" MAX	6000 LBS

*FOS of 2:1

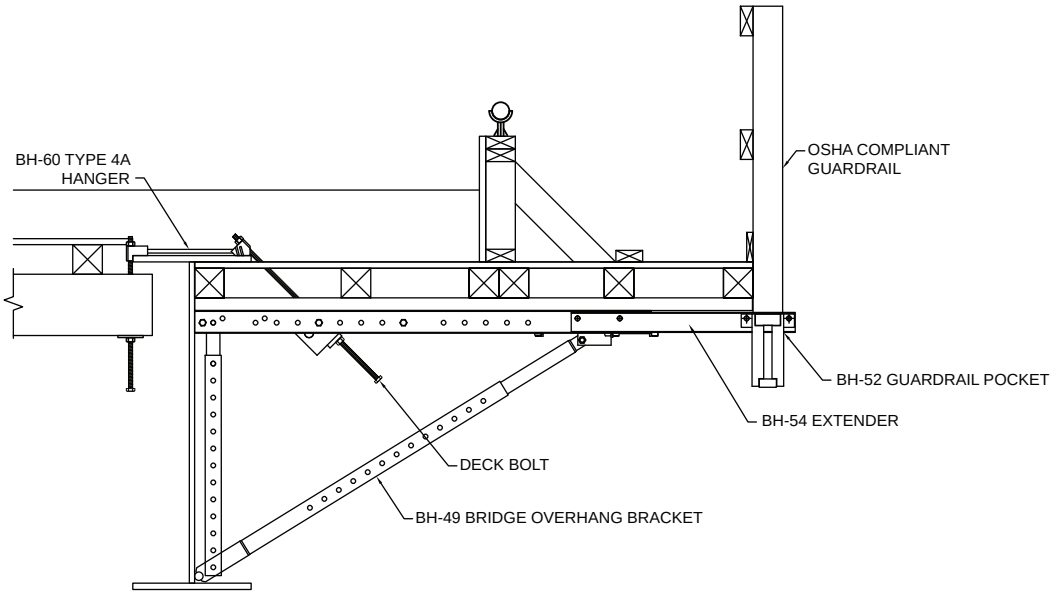

TYPICAL OVERHANG FALSEWORK SECTION FOR WF-STEEL OR PLATE GIRDER BEAM

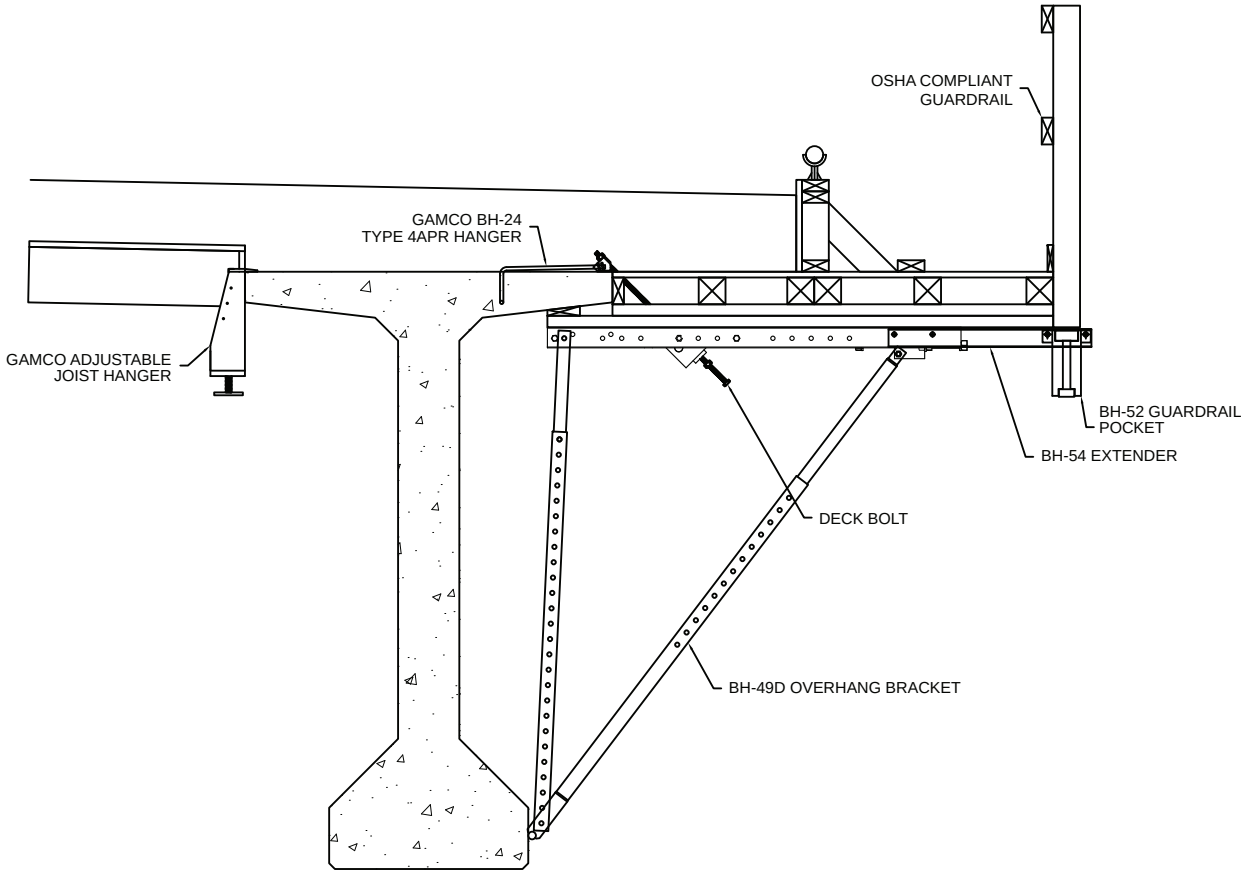

TYPICAL OVERHANG FALSEWORK SECTION FOR BULB-T

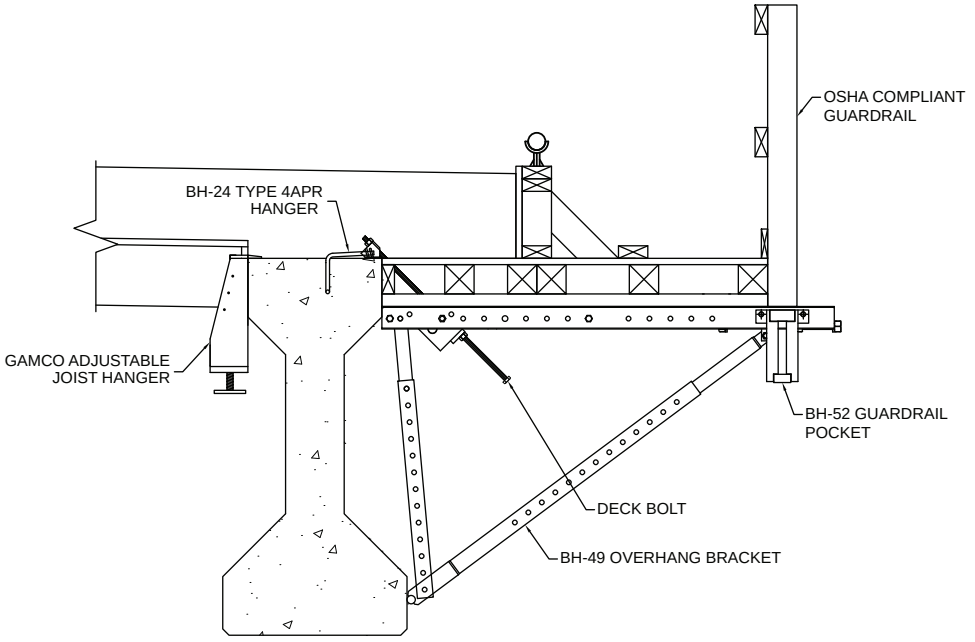

TYPICAL OVERHANG DETAIL FOR AN AASHTO PRECAST GIRDER

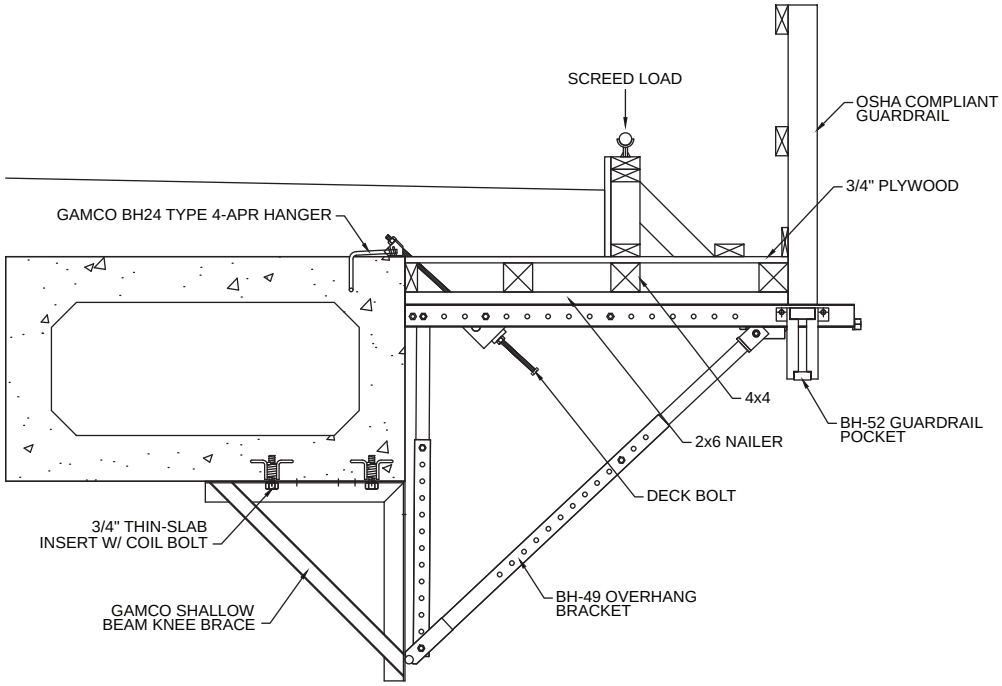

TYPICAL OVERHANG DETAIL FOR A PRECAST BOX GIRDER

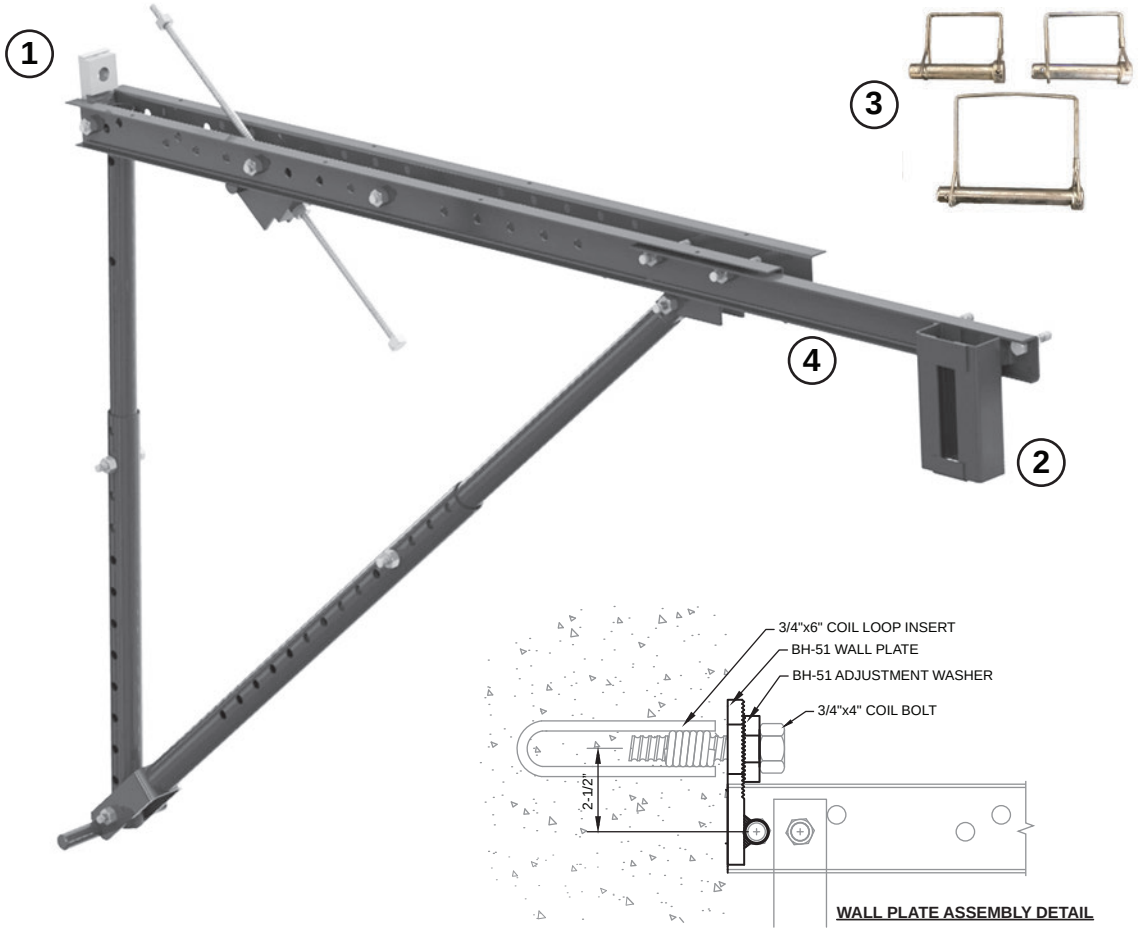

1. BH-51
WALL PLATE ASSEMBLY

- Used for bolting BH-49 Overhang Bracket to shear wall or concrete beam with a 3/4” Coil Bolt and Cast-In insert.
- Contact Gamco engineering department for loading calculations.

2. BH-52
GUARDRAIL POCKET

- Bolts to BH-49 Bridge Overhang Bracket, or BH-54 Extender with (2) 1/2” Grade 5 Bolts
- Accepts 2x4 lumber for guardrail post

3. BH-53
QUICK LOCK ADJUSTMENT PINS

- Full 1/2” Diameter, Grade 5, Zinc Plated
- 3 Quick Lock Pins per pack (for vertical tube, diagonal tube and deck bolt block)

4. BH-54
OVERHANG BRACKET EXTENDER

- Bolts to BH-49 Bridge Overhang Bracket with (2) 1/2” Grade 5 Bolts.
- BH-54 Extends the BH-49 by 17” for walkway.

WARNING: The BH-54 Extender is designed to support walkway load only, construction materials are not to be stored on walkway. When using the BH-54 Extender to support a walkway, each overhang bracket must have an Extender.

GAMCO
CONCRETE FORMING & SHORING
FABRICATION | ENGINEERING
GAMCOFORM.COM
Phone: 513-561-8331 Fax: 513-561-7204

PROJECT INFORMATION

Contractor: WALSH CONSTRUCTION
Job: B-35454
Structure: I-70 OVER SR 121
Date: 2/28/2017
Notes:

FOR INFORMATIONAL PURPOSES ONLY UNLESS STAMPED BY P.E.

DESIGN CRITERIA

CONCRETE LOADING =	160 PCF	HANGER TYPE =	BH-60 T4A
LIVE LOAD =	50 PSF	HANGER SWL =	6000 #
WALKWAY LOAD =	50 PSF	FASCIA BRACKET TYPE =	BH-49
		BRACKET DIAGONAL SWL =	3750 #

DESIGN DATA

BRACKET DEPTH	bkdp =	23	IN
SLAB THICKNESS EDGE	Te =	9.5	IN
SLAB THICKNESS FLANGE	Tf =	10	IN
AVERAGE SLAB THICKNESS	Sb =	9.75	IN
FLANGE WIDTH	fw =	15.75	IN
OVERHANG FROM CL	a =	28	IN
OVERHANG WIDTH	b =	20.125	IN
CL FLANGE TO EDGE	X =	7.875	IN
CATWALK WIDTH	CW =	24	IN
PARAPET WIDTH	PW =	0	IN
PARAPET HEIGHT	PH =	0	IN
CHANNEL OFFSET FROM CL BEAM	Chof =	0	IN
DIAGONAL OFFSET FROM CL BEAM	Ofst =	5.5	IN
BRACKET SPACING	**Sp =**	**48**	**IN**

LOAD DATA

CONCRETE LOAD	P1 =	302	PF
CATWALK LOAD	P2 =	100	PF
SCREED LOAD PER BRKT	P3 =	2000	#
HORIZONTAL LOADING	P4 =	52.81	PF
PARAPET LOAD	P5 =	0.00	PF
OVERHANG LOAD LOC.	d1 =	12.44	IN
CATWALK LOAD LOC.	d2 =	34.50	IN
SCREED LOAD LOC.	d3 =	25.50	IN
HORIZONTAL LOAD ABV BRACKET	d4 =	9.00	IN
PARAPET LOAD LOC.	d5 =	22.50	IN
	dp =	21.63	IN

EFFECTIVE FALSEWORK THICKNESS

HANGER HEIGHT (1" Typ.) =	1.00	IN
FLANGE =	1.00	IN
HAUNCH (- ACTUAL) =	0.00	IN
PLYWOOD =	0.75	IN
JOISTS =	3.50	IN
NAILER =	1.50	IN
OVERHANG BRKT =	4.00	IN
h =	11.75	IN
Y =	14.13	IN

SCREED DATA

CLOSEST WHEEL SPACING			
WHEEL 1-2		48	IN
WHEEL 2-3		48	IN
NO OF WHEELS CONTRIBUTING		1	
SCREED LOAD PER WHEEL		2000	#
SCREED LOAD PER BRACKET	P3 =	2000	

TEST EQUATIONS FOR GOVERNING FORCES ON BRACKET

SUMMATION OF VERTICAL FORCES — Fhy = 3608 LBS
SUMMATION OF MOMENTS ABOUT DIAG. (assuming Rcx=0) — Fhy = 2614 LBS

CALCULATE LOAD ON HANGER

AXIAL LOAD ON HANGER (vertical forces govern & Rcx is positive) — **Fh = 5103 LBS** — SWL = **6000** **<OK>**
REACTION CHANNEL — Rcx = 1522 LBS

CALCULATE LOAD ON DIAGONAL LEG OF BRACKET

REACTION DIAGONAL — Rd = 1874 LBS
ANGLE OF DIAGONAL — ad = 24.09 DEG
LOAD ON DIAGONAL MEMBER — **Pdiag = 2053 LBS** — SWL = **3750** **<OK>**

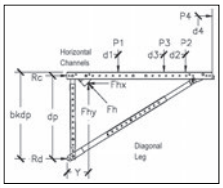

ENGINEERING SERVICES
INTERIOR AND EXTERIOR FALSEWORK DESIGN

Contact Gamco Engineering Department for safe Bridge Overhang Bracket Spacing calculations as well as interior bay waler, joist and plywood calculations.

- Detailed overhang falsework drawings
- Interior bay falsework drawings
- Pier cap falsework drawings
- P.E. stamp available for all 50 states

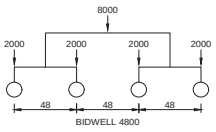

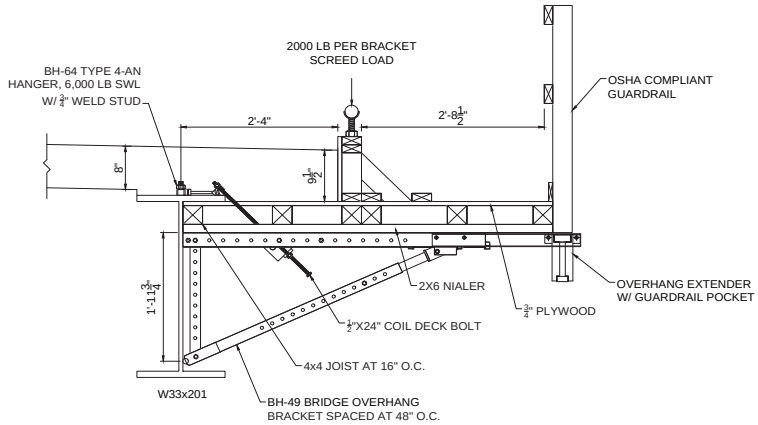

TYP. OVERHANG FALSEWORK DETAIL
SCALE: NA

GENERAL NOTES:
1. DESIGN LOADS:
CONCRETE DL = 160 PCF
CONSTRUCTION LL = 50 PSF
WALKWAY WL = 50 PSF
2. ALL LUMBER TO BE SECURELY CONNECTED WITH NAILS OR SCREWS.
3. PERIMETER HANDRAILS TO BE INSTALLED PER OSHA REQUIREMENTS.
4. LUMBER IS TO BE SPF NO. 2 OR BETTER.
5. PLYWOOD IS TO BE 3/4" APA SHEATHING
6. BRIDGE OVERHANG BRACKETS ARE TO BE AS MANUFACTURED BY GAMCO INC. OR EQUAL.
7. BRIDGE OVERHANG BRACKET EXTENDERS ARE DESIGNED TO SUPPORT WALKWAY ONLY. NO STORAGE OF MATERIALS OR HEAVY LOADING IS PERMITTED ON WALKWAY SUPPORTED BY EXTENDER.
8. DECK BOLT TO BE HIGH STRENGTH COIL ROD WITH A SWL OF 6000 LBS MINIMUM. COIL ROD MUST PENETRATE NUT A MINIMUM OF 2".
9. THIS DESIGN ASSUMES THAT EXTERIOR BEAMS ARE PROPERLY SUPPORTED LATERALLY, PRIOR TO CONCRETE PLACEMENT TO PREVENT BEAM ROTATION.
10.FALSEWORK DESIGN BASED ON 2:1 SAFETY FACTOR.
11.FOR INFORMATION ONLY UNLESS STAMPED BY P.E.

ENGINEER:

GAMCO INC.
GAMCOFORM.COM
513.561.8331 | 3550 ROUND BOTTOM RD. CINCINNATI, OH 45244

JOB:
B-35454
I-70 OVER S.R. 121
CONTRACTOR:
WALSH

DRAWN:	DATE:	SCALE:	SHEET:
MRM	6/21/2017	NA	1/1

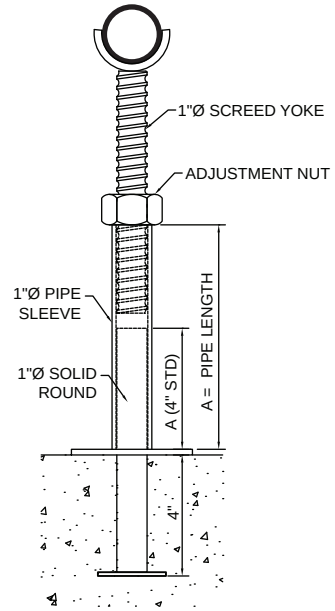

SCREED BASE TYPE 1-PR

- SPECIFY DIMENSION 'A'
- SPECIFY PIPE SLEEVE LENGTH
- PLAIN OR GALVANIZED

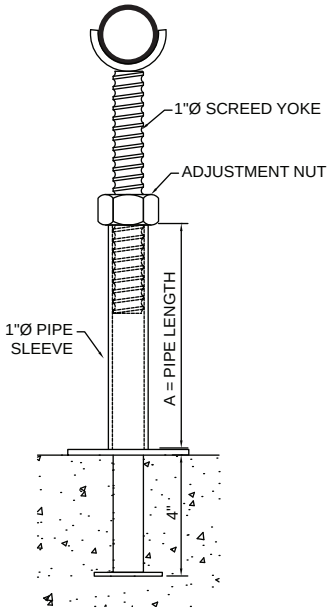

SCREED BASE TYPE 2-PR

- SPECIFY DIMENSION 'A'
- CUSTOM SIZES AVAILABLE
- PLAIN OR GALVANIZED

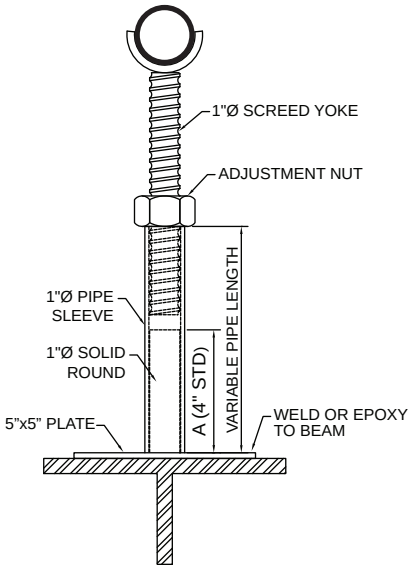

SCREED BASE TYPE 1-S

- SPECIFY DIMENSION 'A'
- CUSTOM SIZES AVAILABLE
- PLAIN OR GALVANIZED

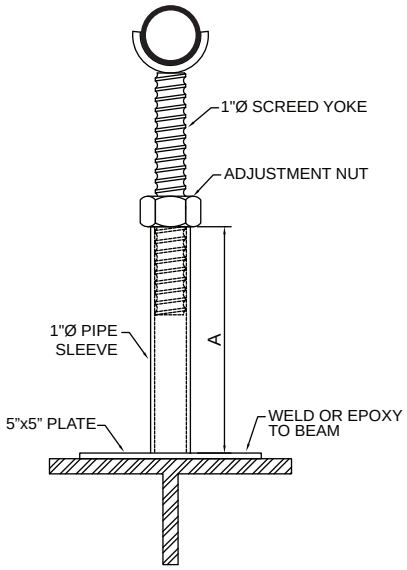

SCREED BASE TYPE 2-S

- SPECIFY DIMENSION 'A'
- CUSTOM SIZES AVAILABLE
- PLAIN OR GALVANIZED

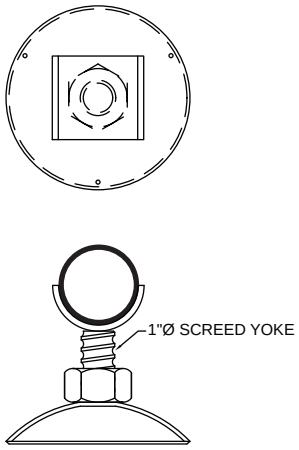

SCREED BASE TYPE C

- STABLE, LOW PROFILE BASE
- USE ON EXISTING CONCRETE OR LUMBER
- GALVANIZED FINISH

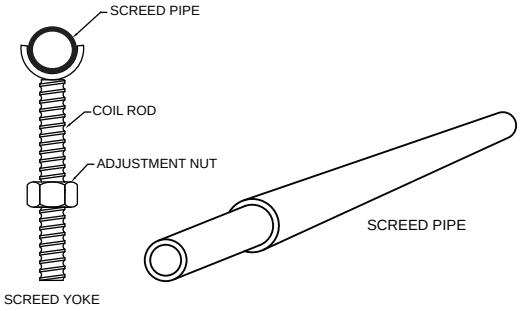

SCREED PIPE

- Any diameter and length required
- Plug-In nose welded

SCREED YOKE

- Std. and HD yokes available
- Specify the coil rod diameter and length, and screed pipe O.D.

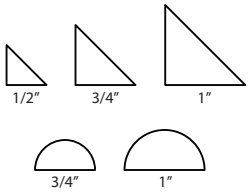

CHAMFER / HALF-ROUND

- Wood and steel available

CONCRETE CURING

- Burlap 5' x 100' or custom size rolls available
- Curelap
- Poly - clear or white, various thickness

CONCRETE PLACEMENT

- Gar-Bro Buckets
- Plastic Hoppers / Elephant Trunk
- Slurry Chutes

VIBRATOR

- Wyco square head and high cycle

DECKING PLYWOOD/LUMBER/MICRO-LAM

- Forming and Decking Plywood
- Dimensional Lumber
- Micro-Lam and Engineered Lumber
- Waler Manufacturing

SLAB BOLSTER

- Height of 3/4”-3” x 5’ length
- Available in plain steel, epoxy coated steel or composite
- For H.D. applications order Beam Bolster (3/4”-5” available)

CONTINUOUS HIGH CHAIR

- Height of 3 1/4”-16” x 5’ length
- Available in plain steel, epoxy coated steel or composite

SLAB BOLSTER UPPER

- Height of 3/4” - 6”
- Available in plain steel, epoxy coated steel or composite
- Order Beam Bolster Upper for H.D. applications (3/4”-5” available)

CONTINUOUS HIGH CHAIR UPPER

- Height of 2” - 16”
- Available in plain steel, epoxy coated steel or composite

INDIVIDUAL HIGH CHAIR

- Height of 3/4” - 24”
- Available in plain steel, epoxy coated steel or composite
- Sand plates available

REBAR SPACER WHEEL

- Accommodates #4-6 rebar
- Concrete cover of 3/4”, 1”, 1-1/4”, 1-1/2”, 2”, 2-1/2”, 3” available

COIL ROD

- STANDARD 12' LENGTHS
- ROD CAN BE CUT BY GAMCO TO ANY LENGTH REQUIRED
- SWL PROVIDES A FACTOR OF SAFETY OF 2 to 1

Rod Diameter	SWL Tension (lbs.)	SWL Shear (lbs.)	Min. Nut Penetration	Min. Coil Penetration
1/2"	9,000	6,000	1"	2"
3/4"	18,000	12,000	1-1/2"	2-1/4"
1"	38,000	25,300	2"	2-1/2"
1-1/4"	56,000	37,500	2-1/2"	2-1/2"
1-1/2"	68,000	45,300	3"	3"

COIL BOLT

- STANDARD LENGTH BOLTS IN STOCK
- CUSTOM LENGTH BOLTS CAN BE MANUFACTURED
- SWL PROVIDES A FACTOR OF SAFETY OF 2 to 1

Bolt Diameter	SWL Tension (lbs.)	SWL Shear (lbs.)	Min. Nut Penetration	Min. Coil Penetration
1/2"	9,000	6,000	1"	2"
3/4"	18,000	12,000	1-1/2"	2-1/4"
1"	36,000	25,300	2"	2-1/2"
1-1/4"	56,000	37,500	2-1/2"	2-1/2"
1-1/2"	41,250	45,300	3"	3"

ADJUSTABLE COIL BOLT (DECK BOLT)

- STANDARD LENGTH BOLTS ARE **18"**, **24"**, **30"** and **36"**
- CUSTOM LENGTH BOLTS CAN BE MANUFACTURED
- SWL PROVIDES A FACTOR OF SAFETY OF 2 to 1

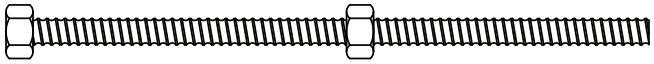

Bolt Diameter	SWL Tension (lbs.)	SWL Shear (lbs.)	Min. Nut Penetration	Min. Coil Penetration
1/2"	6,000*	6,000	1"	2"
3/4"	9,000*	12,000	1-1/2"	2-1/4"

* CAPACITY LIMITED BY STD. NUT. FOR ADDITIONAL CAPACITY USE HD NUT

COIL NUT

- SWL PROVIDES A FACTOR OF SAFETY OF 2 to 1

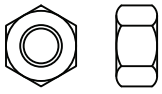

Nut Size	Height	Width (Across Flats)	SWL Tension (lbs.)
1/2" STD	7/16"	7/8"	6,000
1/2" HD	1-3/16"	1-1/8"	9,000
3/4" STD	5/8"	1-1/8"	9,000
3/4" HD	1-3/16"	1-1/8"	18,000
1" STD	1"	1-5/8"	24,000
1" HD	2"	1-3/8"	38,000
1-1/4" STD	1-1/4"	2"	36,000
1-1/2" STD	1-1/2"	2-3/8"	47,500

COIL WING NUT

- WING NUT IS MADE OF DUCTILE IRON
- SWL PROVIDES A FACTOR OF SAFETY OF 2 to 1

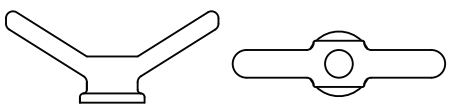

Wingnut Size	SWL Tension (lbs.)
1/2"	9,000
3/4"	18,000
1"	38,000
1-1/4"	52,000
1-1/2"	68,000

PLATE WASHER

- CUSTOM SIZES ARE AVAILABLE

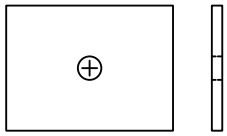

Bolt Diameter	Type	Size
1/2"	STD	3" x 4" x 1/4"
1/2"	HD	4" x 5" x 1/2"
3/4"	STD	3" x 4" x 1/4"
3/4"	HD	4" x 5" x 1/2"
1"	HD	5" x 5" x 3/4"
1-1/2"	STD	5" x 5" x 3/4"
1-1/2"	HD	7" x 7" x 3/4"

NUT WASHER

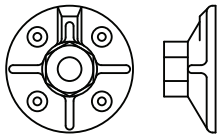

Nutwasher Size	SWL Tension (lbs.)
1/2" Bolt	4,500
3/4" Bolt	9,000
1" Bolt	18,000

BATTER WASHER

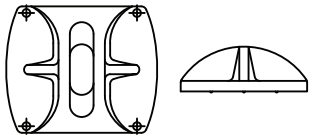

Washer Size	SWL (lbs.)
1/2" Bolt	9,000
3/4" Bolt	18,000
1" Bolt	38,000

COIL THREAD STOP COUPLER

- SWL PROVIDES A FACTOR OF SAFETY OF 2 to 1

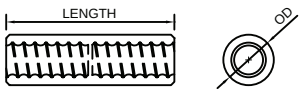

Coupler Size	OD	Length	SWL Tension (Lbs.)
1/2"	3/4"	2-1/2"	9,000
3/4"	1-1/16"	3"	18,000
1"	1-1/2"	4-1/2"	38,000

COIL TIE

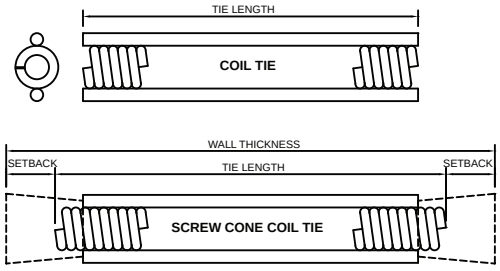

Coil Tie Size	Type	SWL Tension (Lbs.)
1/2" Bolt	2-Strut STD	4,500
1/2" Bolt	2-Strut HD	6,750
3/4" Bolt	2-Strut STD	6,750
3/4" Bolt	2-Strut HD	9,000
1" Bolt	2-Strut STD	13,500
1" Bolt	4-Strut STD	18,000
1-1/4" Bolt	4-Strut STD	27,000

PLASTIC SET-BACK CONE

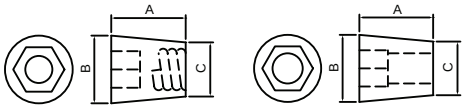

SCREW-ON CONE LOOSE CONE

Cone Size	A	B	C
1/2" Bolt	1"	1-1/4"	1"
1/2" Bolt	1-1/2"	1-1/4"	1"
1/2" Bolt	2"	1-1/4"	1"
3/4" Bolt	1"	1-5/8"	1-7/16"
3/4" Bolt	1-1/2"	1-5/8"	1-7/16"
3/4" Bolt	2"	1-5/8"	1-7/16"
1" Bolt	2-1/2"	2-1/8"	1-3/4"
1-1/4" Bolt	2-1/2"	2-3/8"	2-1/8"

HOOK BOLT

- SWL PROVIDES A FACTOR OF SAFETY OF 2 to 1
- ELECTRO-GALVANIZED
- CUSTOM SIZES AVAILABLE

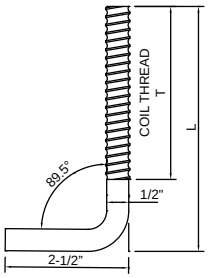

Hook Bolt Size L	Maximum Flange Thickness	Thread Length T	SWL (lbs.)
4-1/2″	2-1/2″	3-1/2″	6,000
6″	3-1/2″	4-1/2″	6,000

COIL LOOP INSERT - STRAIGHT

- SWL PROVIDES A FACTOR OF SAFETY OF 2 to 1

Bolt Size	A	SWL Tension (Lbs.)	Min. Concrete Strength (psi)
1/2"	4"	4,500	2,500
1/2"	6"	7,500	2,500
3/4"	4"	4,500	2,500
3/4"	6"	9,000	2,500
1"	6"	9,000	2,500
1"	8"	9,000	2,500

COIL LOOP INSERT - FLARED

- SWL PROVIDES A FACTOR OF SAFETY OF 2 to 1

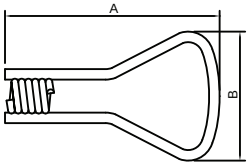

COIL LOOP INSERT - SINGLE

Bolt Size	A	SWL Tension (Lbs.)	Min. Concrete Strength (psi)
3/4"	6"	9,500	2,500
3/4"	9"	13,500	2,500
1"	9"	16,000	2,500
1-1/2"	12"	16,000	2,500

COIL LOOP INSERT - DOUBLE

Bolt Size	A	SWL Tension (Lbs.)	Min. Concrete Strength (psi)
1"	12"	27,000	2,500
1-1/4"	12"	27,000	2,500
1-1/2"	12"	27,000	2,500

THIN SLAB INSERT

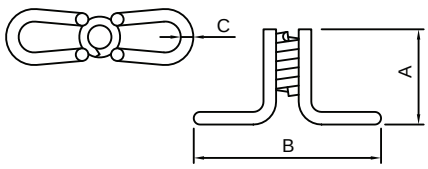

THIN SLAB COIL INSERT SELECTION CHART

Bolt Diameter	Insert Height	Minimum Edge Distance	Minimum Corner Distance	Safe Working Load Tension	Safe Working Load Shear	A	B	C
1/2"	1-3/4"	6"	6"	3,040 lbs.	2,180 lbs.	1-3/4"	4-1/8"	0.223"
3/4"	2-5/16"	8"	8"	4,340 lbs.	3,280 lbs.	2-5/16"	4-7/8"	0.306"
3/4"	3-1/2"	9"	9"	7,140 lbs.	5,200 lbs.	3-1/2"	4-7/8"	0.306"
1"	2-5/16"	8"	8"	4,920 lbs.	3,940 lbs.	2-5/16"	5-1/4"	0.306"
1"	4-1/2"	12"	12"	10,560 lbs.	8,000 lbs.	4-1/2"	5-1/4"	0.306"

SWL = 2:1

PLASTIC COIL CASTING PLUG

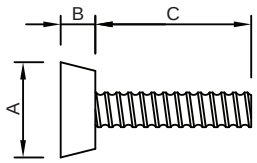

Coil Rod Size	A	B	C
1/2"	1-3/8"	1/2"	2-1/4"
3/4"	2"	3/4"	3"
1"	2-1/4"	3/4"	4-1/2"

COMBO TIE

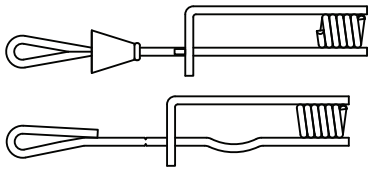

Standard Types of Combo Hangers	
1/2” Coil Tie	Steel-Ply Loop Tie
1/2” Coil Tie	Gates Camlock D-Cone Tie
1/2” Coil Tie	Snap Tie

WELD ANGLE BRACKET

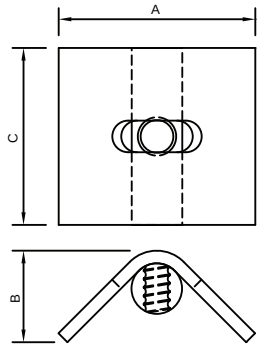

Coil Thread Diameter	Safe Working Load Tension (lbs.)*	A	B	C
1/2"	9,000	3-7/8"	1-7/8"	3-1/2"
3/4"	18,000	4-1/2"	2-1/8"	4"
1"	31,500	6"	2-3/4"	5"

* Actual safe working load is dependent on the field weld, coil rod used and the angle between the coil rod and the weld plate.

NOTES:
1. TO ENSURE MAXIMUM SAFE WORKING LOAD COIL ROD MUST PENETRATE BEYOND THE PIVOT BAR BY A MINIMUM OF 2 THREADS.

2. WELDING MUST BE PERFORMED BY A CERTIFIED WELDER. DETERMINING AND TESTING WELD STRENGTH IS THE RESPONSIBILITY OF THE CONTRACTOR.

COIL DROP-IN ANCHOR

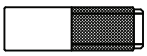

Coil Rod Size	Drill Diameter	Embed Depth	Critical Edge Distance	Critical Spacing	Safe Working Load - Tension (2:1)		
					2000 psi Concrete	3000 psi Concrete	4000 psi Concrete
1/2"	5/8"	2"	6"	8"	1660	2356	3050
3/4"	1"	3"	9"	12"	4080	4730	5380

*Safe Working Load is for anchors used in a tie application, for all other applications a safe working load of 4:1 must be applied. Minimum concrete thickness is 1 1/2 times the embedment depth.

PENCIL ROD & CLAMP

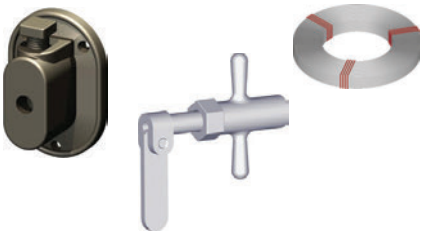

- 1/4” pencil rod available in 12’, 20’ straight lengths or 100# rolls
- Custom lengths available
- “Cat-Head” pencil rod clamps
- Pencil rod pullers
- Fiberglass rod and grippers

GATES CAM-LOCK SYSTEM

- Cam-Locks, stiff back clamps, and scaffold brackets
- D-Cone wall ties, custom wall ties
- Forming plywood pre-drilled

SNAP-TIE SYSTEM

- Long end (8-1/4”) and short end (4-3/4”)
- With cones or washers
- Custom lengths or ends available
- Snap tie wedges and Jahn brackets

TAPER TIE / SHE-BOLT / INNER-TIE

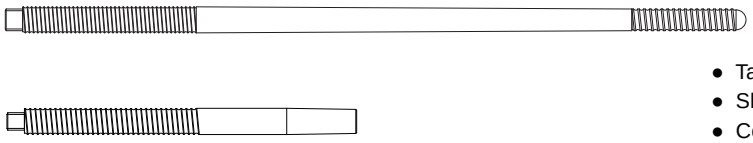

- Taper Ties, various lengths and diameters
- She Bolts, various lengths and diameters
- Coil or Euro-Thread
- Inner ties of various diameters, any length

- **FORMS ARE HANDSET TO SAVE TIME AND MONEY**
- **WELDED STEEL FRAME, STEEL BATTERED FACE**
- **3/4” HDO PLYWOOD UPPER FACE**

BARRIER/PARAPET WALL FORM

BARRIER TRANSITION FORM

- **ALL STD. STATE SHAPES AVAILABLE**
- **CUSTOM AND END TRANSITIONS AVAILABLE**
- **OVER 20 YEARS OF PROVEN SUCCESS**

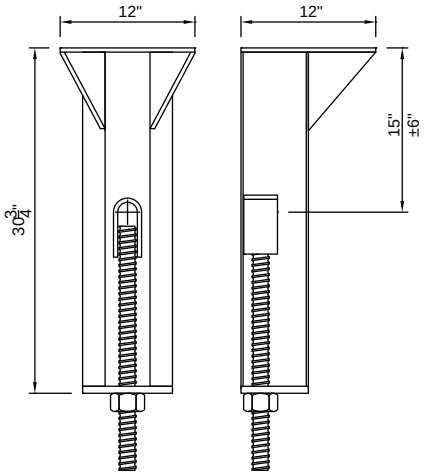

25 KIP BRACKET

- 25 KIP SAFE WORKING LOAD (2:1)
- SINGLE 1-1/2" DIA. THRU-BOLT
- USE SINGLE 2" O.D. THRU-TUBE

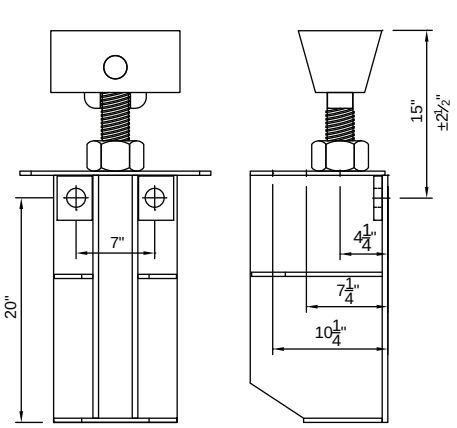

70 KIP BRACKET 3-POSITION

- 70 KIP SAFE WORKING LOAD (2:1)
- DOUBLE 1-1/2" DIA. THRU-BOLT
- USE DOUBLE 2" O.D. THRU-TUBE

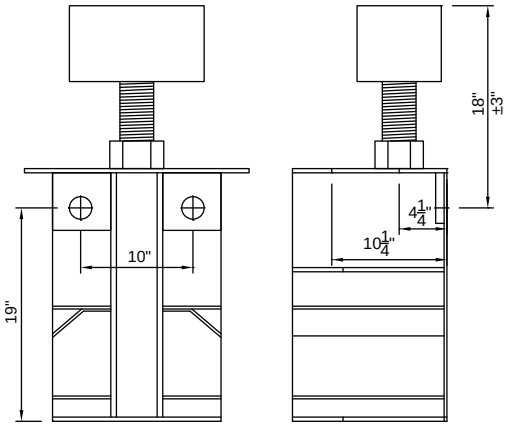

140 KIP BRACKET 2-POSITION

- 140 KIP SAFE WORKING LOAD (2:1)
- DOUBLE 2" DIA. THRU-BOLT
- USE DOUBLE 2-1/2" O.D. THRU-TUBE

THRU-BOLT

- 1-1/2" AND 2" DIAMETER
- HIGH STRENGTH STEEL
- VARIOUS LENGTHS AVAILABLE

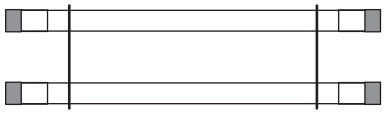

THRU-TUBE

- SPECIFY FOR USE WITH 25, 70 OR 140K BRACKET
- TUBES ARE PRE-FABRICATED WITH SPACER PLATES AND SLEEVES WITH CAPS

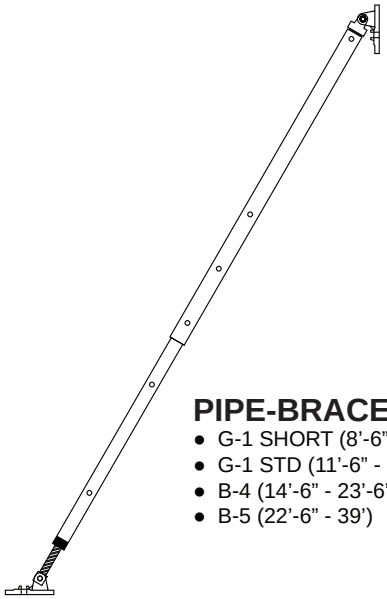

PIPE-BRACE

- G-1 SHORT (8'-6" - 14')
- G-1 STD (11'-6" - 17')
- B-4 (14'-6" - 23'-6")
- B-5 (22'-6" - 39')

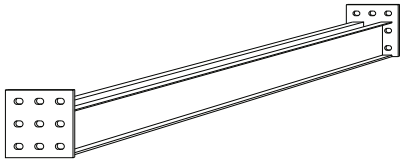

STEEL-WALER

- 5" double channel x various sizes
- 6" double channel x 6', 8', 10' w/ splice plates
- Custom walers available

ALUMA-BEAM

- Stock lengths 10'-6", 12', 14', 16', 18', 20', 21'
- Custom sizes available
- Replacement plastic nailer strips

GAMCO CLAMP GANG FORMS (GCG)
CRANE-SET CLAMP-TOGETHER FORMING SYSTEM

The Gamco Clamp Gang Form is a clamp together, crane-set wall form system designed for use in heavy civil and commercial projects such as water treatment plants, bridge piers and abutments, high rise foundations, core walls and retaining walls. The largest panel size is 8' x 12', all panels are in feet and inches dimensions. With a steel frame, HDO plywood face, large panel size and allowable pour pressure up to 2000 psf, the GCG System is ideal for Contractors looking cut labor costs and increase efficiency.

GAMCO STEEL FORMS
SELF SUPPORTING ALL-STEEL GANG FORMS

The Gamco Steel Form is an all-steel, self-supporting, modular gang form system consisting of many sizes allowing for design flexibility. This system is best utilized for forming large structural walls and columns.

JOB-BUILT GANG FORMS
GATES 9M AND ALUMA BEAM GANGS

Gamco offers design, sales and component rental for Gates 9M wood gang forms as well as Aluma Beam or LVL and Steel Channel Waler Gang forms.

- The Gates 9M Anchor Lock System is a plywood and lumber gang form system that is cost effective for contractors wanting to manufacture their own high quality wood forms.
- Gamco's Aluma-Beam is a versatile gang form that is simple to build, easy to use, lightweight, and has high strength.

HAND-SET FORMS
STEEL-PLYWOOD FORM, CAM-LOCK, COIL AND SNAP TIE

Gamco offers four different Hand-Set Form systems.

- Steel-Plywood Form - We have a full rental fleet of 3', 4', 5', 6' and 8' tall forms with all sizes of wall ties in stock.
- Gates Cam-Lock - Hardware available for rent or purchase, all common sizes of wall ties are kept in stock.
- Coil Tie - 1/2", 3/4" and 1" Coil Ties, with or with out cones, 2-strut and 4-strut available.
- Snap Tie - Special order, ties will usually ship within 3 days.

STEEL ROUND COLUMN FORMS

Gamco Steel Round Column Forms are made with a multipurpose side rail to provide connection to Gamco Clamp Gang Form Panels, All-Steel Girder Panels, and Steel-Plywood Forms to form bull nose ends on bridge piers. When used together as a circular column form, they can be either bolted using 3/4" fit-up bolts and nuts, or Assembly Lock Clamps from the GCG system.

Steel Round Column Forms are available for rental and purchase in standard diameters, any size can be manufactured to meet specific job conditions.

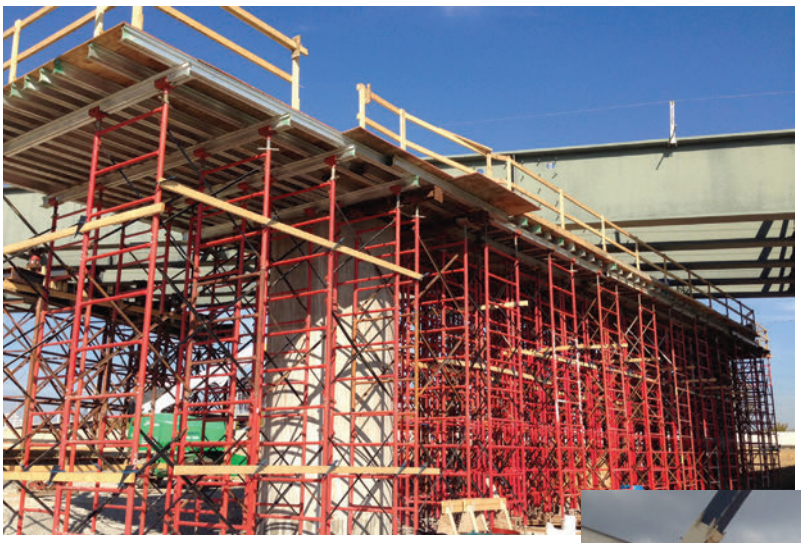

10K SCAFFOLD SHORING

An efficient and cost effective shoring system, 10K Scaffold Shoring can be used to form elevated slabs in buildings, thickened slab bridges, culvert tunnels, bridge pier caps and hammer heads. This system supports leg loads of up to 10,000 lbs. Scaffold frames can be stacked to reach any height a project requires. 6-1/2" Aluma Beams are used for joists and stringers. Gamco Engineering Department can provide layout drawings as well as PE stamped drawings and calculations.

POST SHORES

- Standard post shores form 3'-6" to 16'-0"
- HD post shores to 18'-0"
- Extra HD 30K and 50K post shore for reshoring and heavy load conditions

Drop-Head Deck System

Post and Modular Aluminum Beam Drop Head System

The Dropshore system is an engineered shoring system consisting of lightweight, modular aluminum beams that erect and strip quickly and safely.

- The drophead feature allows for early removal of the decking members without disturbing the post shore. This permits faster pour and strip cycles.
- The interlocking quality of our shoring members make our system extremely versatile to varying jobs conditions and obstructions.
- Unlike other systems that use expensive deck panels, the Dropshore system uses sheets of 3/4" plywood. Both sides of the plywood are used and expensive panel 'rehab' is eliminated.
- The Dropshore System is commonly used to form culverts because it is easily set, stripped and moved to the next pour in wheeled racks.
- The Dropshore System excels in high-rise construction where fast cycle time and reshoring is required.

GAMCO

CONCRETE FORMING & SHORING

FABRICATION | ENGINEERING

GAMCOFORM.COM

513.561.8331

Contractor:

Project:

Contact:

Phone: **Email:** **Page:** **Date:**

PROGRESSIVE
FIELD

SPEED LIMIT
30

GEORGE A. MORE COMPANY

AMERICAN OWNED AND FAMILY OPERATED SINCE 1977

HANDSET FORMING SYSTEM
Steel-Plywood Form Sales & Rental
Snap Ties
Coil Ties
Pencil Rod / Clamps
Turnbuckles / Braces

GANG FORMING SYSTEM
Gamco Clamp Gang Forms
Steel Girder Forms
Aluma-Gang Forms
Steel Walers
Anchor Brackets
Thru-Bolts / Thru-Tubes
Taper Ties
She-Bolt Ends / Inner Rods
Pipe Braces

COLUMN FORMS
Steel Column Forms
Fiberglass Column Forms
Paper Tube Column Forms

SHORING
High-Load Shoring System
Drop-Head Shoring System
Span-Alls
Post Shores
Aluma-Beam

BRIDGE DECK ACCESSORIES
Bridge Overhang Brackets
Extender For BOB
Guardrail Pocket For BOB
Wall Plate Assembly For BOB
Deck Bolts
Beam Hangers
Haunch Hangers
Adjustable Joist Hanger
Screed Pipe
Screed Support Yokes
Barrier Wall Forms
Slab Bolster / High Chairs

COIL THREAD PRODUCTS
Coil Rod
Coil Nuts / Wing Nuts
Coil Bolts
Adjustable Deck Bolt
Coil Loop Inserts
Coil Tie
Coil Coupler
Coil Thread Plastic Plug
Weld Angle Brackets
Plate Washers
Drop-In Anchors

MISC. ACCESSORIES
Form Liner
Form Release
Curing Compound
Grouts
Epoxies
Sprayers
Concrete Buckets
Plastic Hoppers / Elephant Trunk
Vibrators
Custom Foam Blockouts

WOOD PRODUCTS
Forming Plywood
Decking Plywood
Lumber
Engineered Lumber / Microlam
OSHA Walk Plank
Chamfer
Half Round

ENGINEERING SERVICES
Form Layout Drawings
Shoring Layout Drawings
Bridge Deck Falsework Drawings
Bridge Overhang Calculations
Decking Calculations
P.E. Sealed Drawings / Calculations

WWW.GAMCOFORM.COM

513.561.8331 - 3550 ROUND BOTTOM RD. CINCINNATI, OH 45244

EXPERT CONCRETE FORMING SOLUTIONS

REV 4